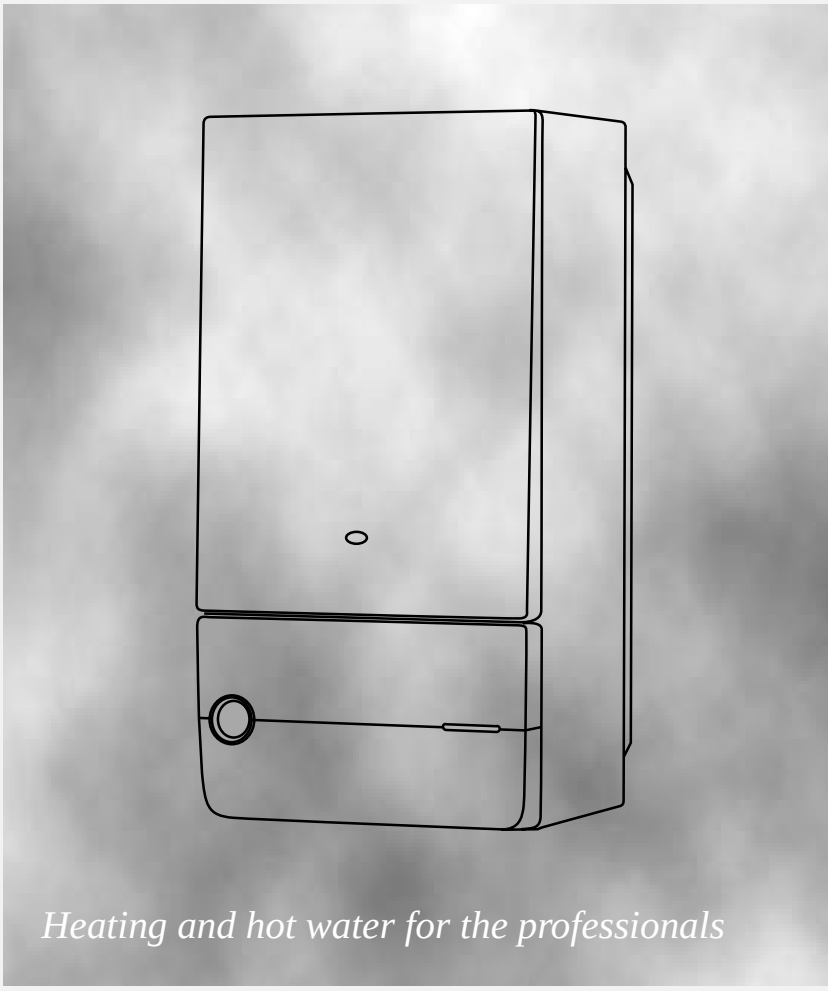

Installation and Servicing Instructions

THEMA F

THIS IS A CAT II2H3+ APPLIANCE

spares & parts online
IBASIS.co.uk©

IN WARRANTY
TECHNICAL HELPLINE
01773 828400

HEATCALL
01773 828100

Saunier Duval

INSTALLATION AND SERVICING INSTRUCTIONS

THEMA F 23 E - THEMA F SB 18 E - THEMA F SB 23 E

Note!
*The boiler serial number is marked on the label attached to the inside of the boiler. Refer to the '**Introduction**' section page 3 for a description of the basic functions of the boiler. To safely operate the boiler, refer to the Users Instructions.*

INSTALLATION SECTION

Introduction ..... Page 3
Dimensions 3
Technical data ..... 4 - 5
Boiler schematic 6
Fixing jig 7
Domestic hot water system design 7
Heating system design 8
Piping system installation 8
Boiler location 9
Boiler installation 10
Rear outlet flue installation ..... 11 - 12
Top outlet flue installation 13
Electrical connection 14
Commissioning ..... 15 - 16
Safety devices 16
Settings 17
Changing gas type 17

SERVICING SECTION

Routine cleaning and inspection ....Page 18 - 19
Replacement of parts ..... 19 - 24
Microswitch assembly 19
Fan 19
Air pressure switch 19
Spark generator 19
Main printed circuit board 19
Ignition printed circuit board 20
Pump 20
Temperature/Pressure gauge 20
Reversing valve assembly 20
Reversing valve front section 21
Loss of water switch 21
Water valve or diaphragm 21
Gas valve 22
Modulating coil 22
Central heating safety valve 23
Heat exchanger 23
Expansion vessel 23
Boiler thermistor 23
Overheat thermostat 24
Combustion chamber insulation 24
Ignition electrode 24
Flame sense electrode 24
Burner 24
Burner injectors 24
Timeclock 24
Schematic wiring diagram 25
Fault finding ..... 26 - 27
Spare parts 27

UK ***Mandatory warning notice for CEE countries***
WARNING, *this appliance is designed, approved and inspected to meet the requirements of the English market. The identification plate located on the inside of the appliance **certifies the origin** where the product was manufactured and the **country** for which it is intended.*
*If you see any exception to this rule, please contact your nearest **Saunier Duval** dealer.*
Thank you in advance for you assistance.

INTRODUCTION

The **THEMA F 23 E** boiler is a wall mounted modulating combination boiler with electronic ignition providing central heating and instantaneous domestic hot water.
Both the central heating and domestic hot water temperature are user adjustable from the boiler control panel.
Domestic hot water demand always has priority over heating demand.

The ***THEMA F SB 18 E and SB 23 E*** boilers are wall mounted modulating boilers with electronic ignition providing central heating only.
The central heating temperature is user adjustable from the boiler control panel.

The boilers are of the **II2H3+** category for use with Natural Gas (G20) as distributed in the United Kingdom, or with Butane or Propane gas (G30/G31) with the appropriate conversion kit.
Conversion kits:

Conversion	Part No.
Natural Gas (G20) to G30/G31	86161

Boilers burning LPG or similar gases MUST NOT be fitted in basements or below ground level.

The boiler has a fan assisted balanced flue which both discharges the products of combustion to and draws the combustion air from the outside air.

The boiler is supplied for rear outlet flue connection. Alternatively, the boiler is designed to allow the flue system to be connected to the top of the boiler, top outlet flue connection. Refer to the flue fitting instructions.

Electrical components have been tested to meet the equivalent requirements of BEAB.

The boiler is designed for use as part of a sealed water central heating system with fully pumped circulation. The pump, expansion vessel and associated safety devices are all fitted within the boiler.

The boiler can be installed against either an external wall or on an adjacent inside wall, that is, the flue system will pass directly to the rear or to either side to the terminal fitted on the outside wall face.

The installation must be carried out by a competent person in accordance with the relevant requirements of The Building Regulations, The Water Byelaws, The Building Standards (Scotland) Regulations and any applicable local regulations.

Ancillary equipment
A range of flue accessories are available including vertical flues, twin-pipe flues, bends etc.
For further information contact your supplier.

Diagram 1

THEMA F 23 E ***THEMA SB 18 E and SB 23 E***

DIMENSIONS

Diagram 2

The boiler is delivered in three separate packages:
- The boiler
- The fixing jig
- The flue system

Net weight: 41 kg
Gross weight : 43 kg

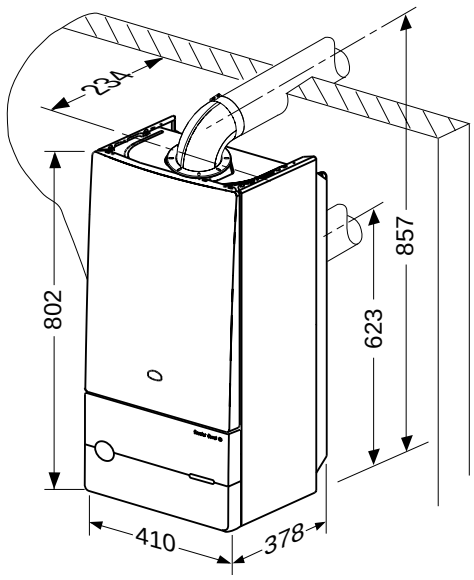

TECHNICAL DATA

		THEMA F 23 E	THEMA F SB 18 E	THEMA F SB 23 E
Heating output	automatically variable from (kW)	8,9	8,9	8,9
	(BTU/H)	30,000	30,000	30,000
	to (kW)	23,3	18,5	23,3
	(BTU/H)	80,000	63,000	80,000
Efficiency	(%)	91,5	90,5	91,5
Heating adjustment		38°C to 90°C		
Expansion vessel effective capacity	(l)	6,5	6,5	6,5
Expansion vessel charge pressure	(bar)	0,5	0,5	0,5
Maximum system capacity at 75°C	(l)	160	160	160
Safety valve, maximum service pressure	(bar)	3	3	3
Products outlet diameter	(mm)	60	60	60
Fresh air inlet diameter	(mm)	100	100	100
Hot water output	automatically variable from (kW)	8,9	—	—
	(BTU/H)	30,000	—	—
	to (kW)	23,3	—	—
	(BTU/H)	80,000	—	—
Maximum hot water temperature	(°C)	65	—	—
Specific flow rate (for 30°C temp rise)	(l/min)	9,6	—	—
Threshold flow rate	(l/min)	3	—	—
Nominal water flow rate	(l/min)	12	—	—
Maximum supply pressure	(bar)	10	—	—
Minimum operating pressure	(bar)	0,5	—	—
Electrical supply	(V)	230	230	230
Maximum absorbed power	(W	150	150	150

Natural Gas (G20)	Burner injector	mm	1,20	1,20	1,20
	Inlet pressure	mbar	20	20	20
	Diaphragme	mm	—	—	—
	Gas rate (maximum)	m^3/h	2,70	2,17	2,70
	Gas rate (minimum)	m^3/h	1,13	1,13	1,13
Butane (G30)	Burner injector	mm	0,73	0,73	0,73
	Inlet pressure	mbar	29	29	29
	Diaphragme	mm	4,8	3,2	4,8
	Gas rate (maximum)	kg/h	2,01	1,62	2,01
	Gas rate (minimum)	kg/h	1,13	1,13	1,13
Propane (G31)	Burner injector	mm	0,73	0,73	0,73
	Inlet pressure	mbar	37	37	37
	Diaphragme	mm	4,8	3,2	4,8
	Gas rate (maximum)	kg/h	1,98	1,60	1,98
	Gas rate (minimum)	kg/h	0,97	0,97	0,97

Pressure table :

		Heat output														
	(kW)	8,9	10	11	12	13	14	15	16	17	18	19	20	21	22	23,3
	(Btu/h)	30387	34142	37557	40971	44385	47799	51214	54628	58042	61456	64871	68285	71699	75113	79552
		Heat input														
	(kW)	11,9	13,2	14,4	15,7	16,9	18,1	19,2	20,4	21,5	22,7	23,8	24,9	26,0	26,9	28,3
	(Btu/h)	40678	45130	49332	53481	57579	61627	65626	69575	73477	77333	81142	84906	88913	91713	96602
GAS																
G 20	(mbar)	1,3	2,1	2,6	3,0	3,5	4,0	4,5	5,1	5,7	6,3	6,9	7,6	8,3	8,8	9,8
G 30	(mbar)	3,7	5,3	6,3	7,4	8,6	9,8	11,1	12,5	13,9	15,5	17,0	18,6	20,4	21,7	24,1
G 31	(mbar)	4,0	6,3	7,5	8,8	10,2	11,7	13,3	14,9	17,2	20,1	20,3	22,2	24,4	26,0	28,8

Pump :

The performance of the pump varies according to the pump bypass setting, see diagram 3.

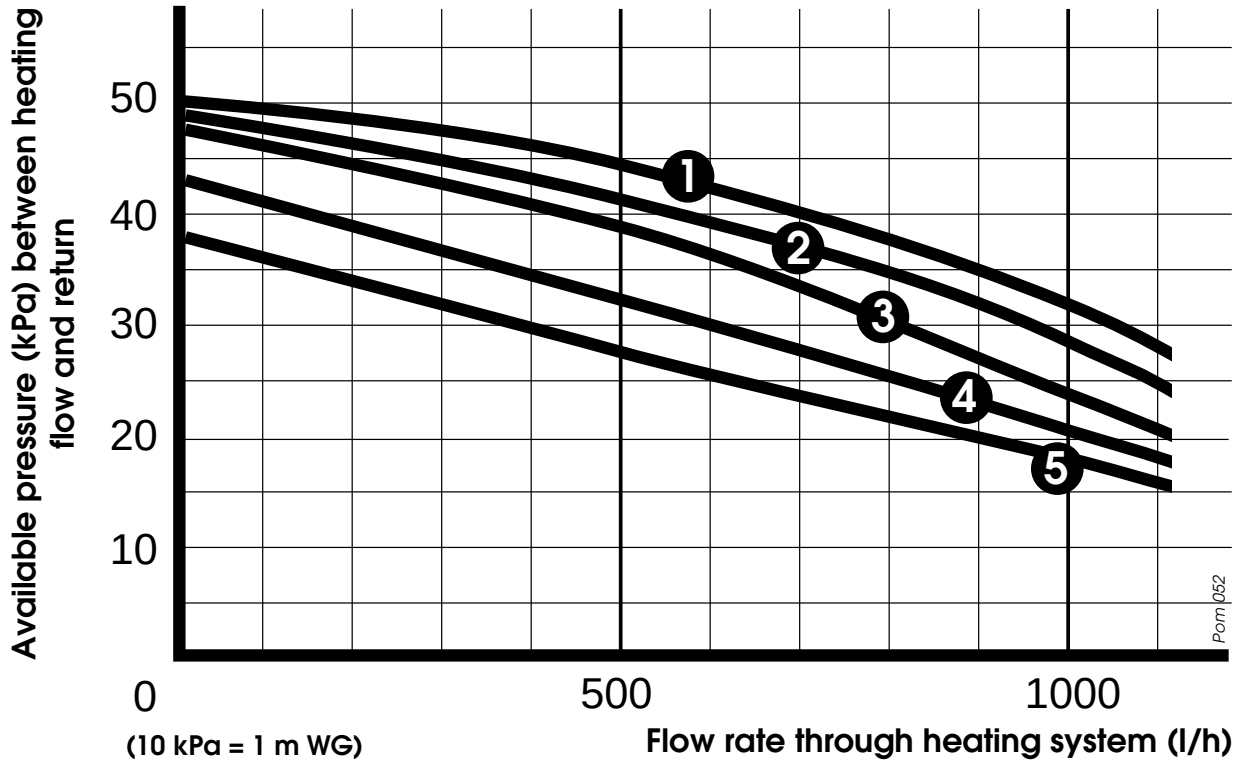

Diagram 3

1. Bypass fully shut
2. Open 1/4 turn
3. Open 1/2 turn
4. Open 1 turn
5. Open 2 turns

THEMA F 23 E

3 - Ignition module
4 - Heating temperature adjuster
5 - Hot water temperature adjuster
6 - Temperature/ressure gauge
8 - Expansion vessel
9 - Pump
10 - Automatic air vent
11 - Burner
12 - Heat exchanger bleed pipe
13 - Heatexchanger
14 - Gas valve
16 - Heating and hot water thermistor
17 - Ignition electrode
19 - Overheat thermostat
20 - Flame sense electrode
21 - Loss of water pressure switch
22 - Fan
23 - Air pressure switch
24 - Gas cock

A - Heating return
B - Cold water inlet
C - Heating flow
D - Domestic hot water flow
E - Gas supply

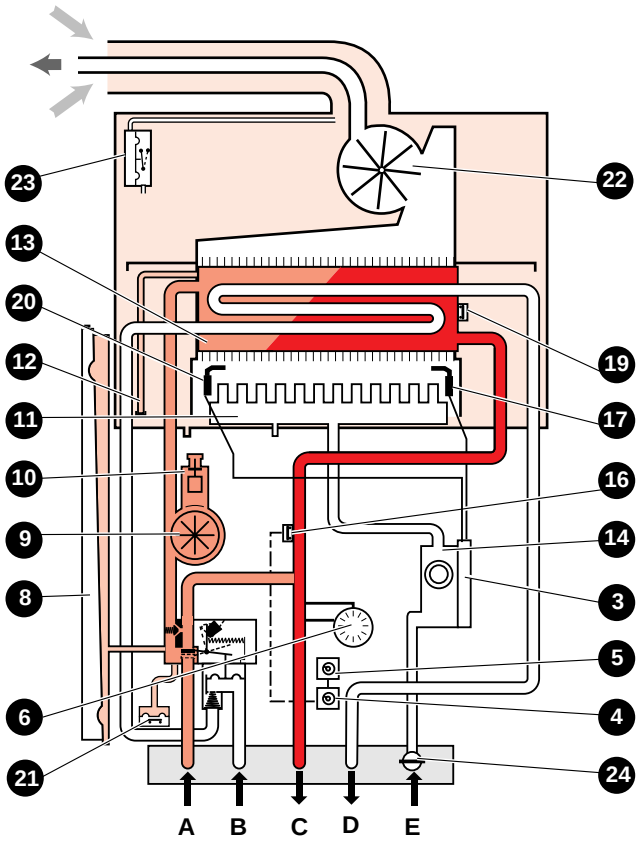

THEMA F SB 18 E - THEMA F SB 23 E

3 - Ignition module
4 - Heating temperature adjuster
6 - Temperature/pressure gauge
8 - Expansion vessel
9 - Pump
10 - Automatic air vent
11 - Burner
12 - Heat exchanger bleed pipe
13 - Heatexchanger
14 - Gas valve
16 - Heating and hot water thermistor
17 - Ignition electrode
19 - Overheat thermostat
20 - Flame sense electrode
21 - Loss of water pressure switch
22 - Fan
23 - Air pressure switch
24 - Gas cock

A - Heating return
B - Cold water inlet
C - Heating flow
D - Domestic hot water flow
E - Gas supply

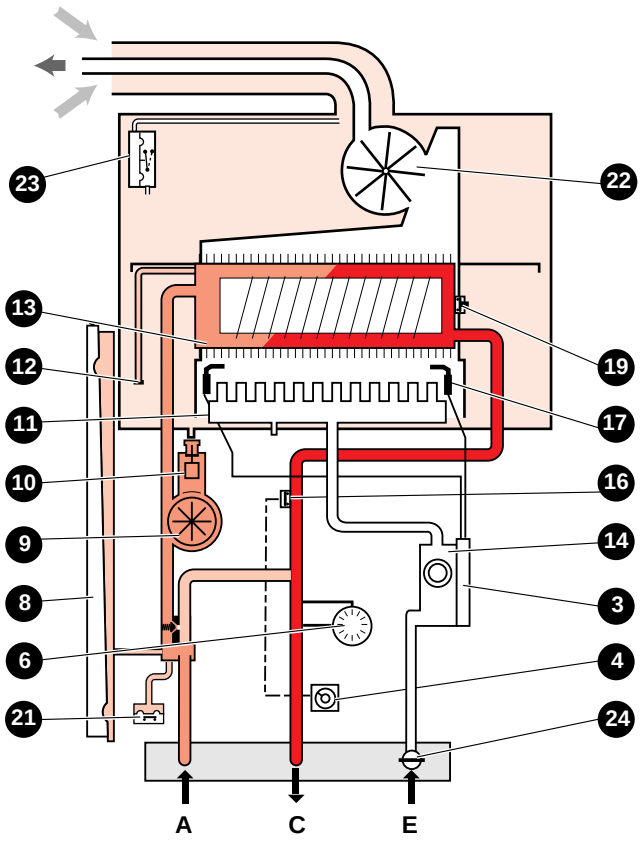

Shy 131

Diagram 4

THEMA F 23 E

From left to right, **the fixing jig** comprises:

A - Heating return with isolating valve (**m**).
B - Cold water inlet with isolating valve (**p**).
C - Heating flow with isolating valve (**q**), drain screw (**r**) and safety valve (**s**).
D - Domestic hot water out.
E - Gas service cock.

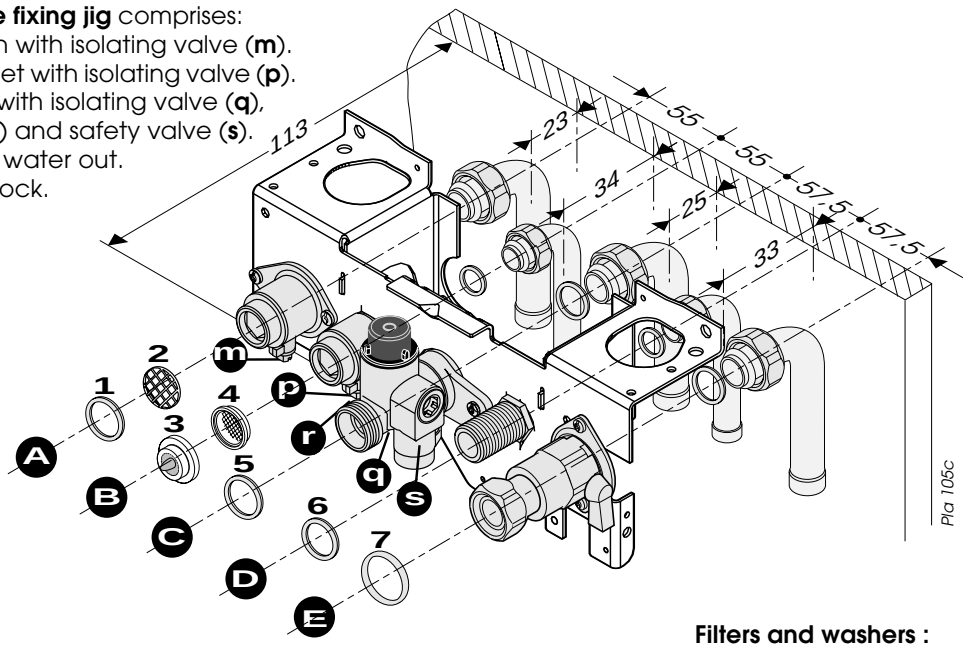

Filters and washers :

1 - Washer
2 - Metal filter
3 - Flow regulator
4 - Plastic filter
5, 6 & 7 - Washers

THEMA F SB 18
THEMA F SB 23 E

From left to right, **the fixing jig** comprises:

A - Heating return with isolating valve (**m**).
C - Heating flow with isolating valve (**q**), drain screw (**r**) and safety valve (**s**).
E - Gas service cock.

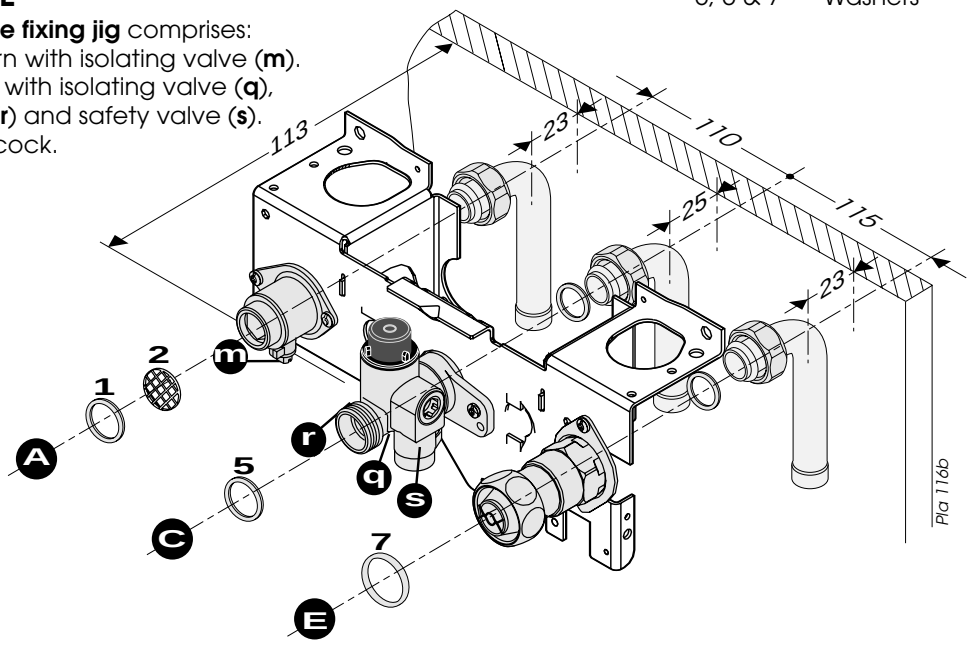

Diagram 5

DOMESTIC HOT WATER SYSTEM DESIGN

• Copper tubing or plastic Hep$_2$O may be used for the domestic hot water system. Unnecessary pressure losses should be avoided.

• The boiler may operate with a minimum supply pressure of 0,3 bar but under a reduced flow rate. Optimum performance will be obtained from a supply pressure of 1 bar.

• The flow restrictor must be fitted in the cold water inlet during installation. This limits the flow through the boiler to a maximum of 12 l/min.

HEATING SYSTEM DESIGN

• The **THEMA F** boiler is compatible with any type of installation.
• Heating surfaces may consist of radiators, convectors or fan assisted convectors.
• Pipe sectional areas shall be determined in accordance with normal practices, using the output/pressure curve **(diagram 3).** The distribution system shall be calculated in accordance with the output requirements of the actual system, not the maximum output of the boiler. However, provision shall be made to ensure sufficient flow so that the temperature difference between the flow and return pipes be less than or equal to 20°C. The minimum flow is 500 l/h.
• The piping system shall be routed so as to avoid any air pockets and facilitate permanent venting of the installation. Bleed fittings shall be provided at every high point of the system and on all radiators.
• The total volume of water permitted for the heating system depends, amongst other things, on the static head in the cold condition.
The expansion vessel on the boiler is pressurised at 1 bar (corresponding to a static head of 5 m w.g.) and allows a maximum system volume of 140 litres for an average temperature of 75°C and a maximum service pressure of 3 bar. This pressure setting can be modified at commissioning stage if the static head differs.
An additional expansion vessel can be fitted to the system if required, see **diagram 6.**
• Provision shall be made for a drain valve at the lowest point of the system.
• Where thermostatic radiator valves are fitted, not all radiators must be fitted with this type of valve, and in particular, where the room thermostat is installed.
• In the case of an existing installation, it is **ESSENTIAL** that the system is thoroughly flushed prior to installing the new boiler using a proprietary product such as **Fernox** or **Sentinel.** Contact the product manufacturers for specific details.

Filling the system
Provision must be made for filling the system at low level. The use of a WRC approved filling loop is strongly recommended, connected as shown in **diagram 6.**

PIPING SYSTEM INSTALLATION

• Heating system connections - Pipe diam 22 mm
• Hot water system connections - Pipe diam 15 mm
• Gas connection - Pipe diam 22 mm
• Safety valve discharge - Pipe diam 15 mm

Water connection
Connect the water pipes to the fixing jig using the copper tails supplied, **see diagram 5**.
Warning: To prevent damage to the isolating cocks, do not solder joints or fittings with the copper tails connected.
Connect the system pipework to the boiler observing the correct flow and return format as shown in **diagram 6.**

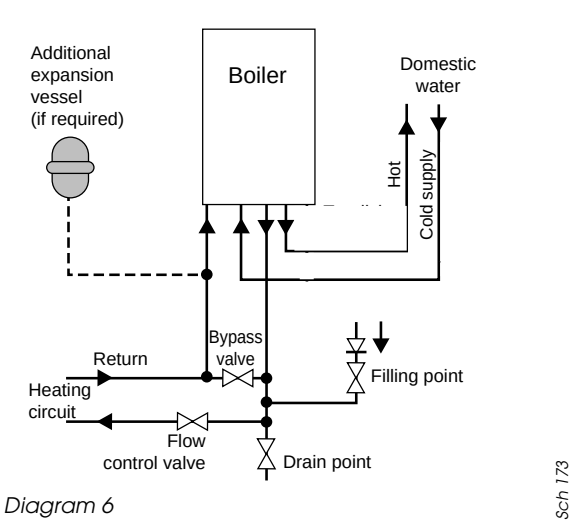

Diagram 6

Safety valve discharge
WARNING. It must not discharge above an entrance or window or any type of public access area.
Connect the safety valve discharge pipe to the boiler, the discharge must be extended using not less than 15 m o.d. pipe, to discharge in a visible position outside the building, facing downward preferably over a drain. The pipe must have a continuous fall and be routed to a position so that any discharge of water, possibly boiling or steam, cannot create any danger to persons, damage to property or external electrical components and wiring. Tighten all pipe connection joints.

Gas connection
• The supply from the governed gas meter must be of adequate size to provide a constant inlet working pressure of 20 mbar (8 in w.g.).
To avoid low gas pressure problems, it is recommended that the gas supply is connected using 22 mm pipe.
• On completion, the gas installation must be tested using the pressure drop method and purged in accordance with the current issue of BS6891.

Gas Safety (Installation and Use) Regulations
In your interests and that of gas safety, it is the law that ALL gas appliances are installed and serviced by a competent person in accordance with the above regulations.

Clearances
The position of the boiler must be such that there is adequate space for servicing.
The recommended clearances are:
40 mm either side of the boiler.
600 mm at the front of the boiler.
300 mm below the boiler.

Fixing jig
The fixing jig comprises three parts:
1) The connecting plate which allows the connection and soundness testing of all the pipework before the boiler is fitted and helps support the weight of the boiler.
2) The hook which supports the weight of the boiler.
3) The template which ensures the hook and connecting plate are correctly fitted relative to one another.

• Place template on wall in required position, making allowances for the necessary clearances etc., **see diagram 7.**
Note: It is permissible to install the boiler with reduced clearances at the bottom and sides of the boiler PROVIDING that adequate consideration is given for Servicing/Repairs at a later date. If any doubt exists, contact the **Saunier Duval Technical Helpline 01773 828400.**

• Mark the position of the holes for the hook and connecting plate.
• Drill, plug and fix the connecting plate and hook to the wall using suitable screws.
• Check that both the hook and connecting plate are level.

If the boiler is not installed immediately, protect the various couplings to prevent any ingress of foreign materials e.g. plaster, paint etc.

Terminal position
The minimum acceptable spacings from the terminal to obstructions and ventilation openings are shown in **diagram 8.**

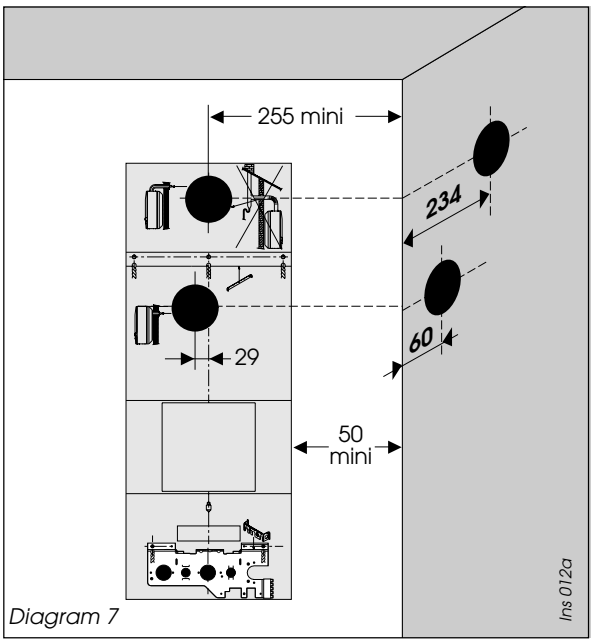

Diagram 7

The boiler must be installed so that the terminal is exposed to the external air.
Note: Under certain weather conditions the flue may produce a plume of condensation, this is quite normal.
If the terminal is fitted within 850mm of a plastic or painted gutter or 450m of painted eaves, an aluminium shield of a minimum length of 750mm should be fitted to the underside of the gutter or painted surface.

Should any doubt exist as to the permissible position of the terminal, contact the **Saunier Duval Technical Helpline 01773 828400.**

Cupboard or compartment ventilation
The boiler can be fitted in a cupboard or compartment without need for permanent ventilation.

Minimum dimensions (in mm) for the positioning of flue terminals

A - Under a window 300
B - Under an air vent 300
C - Under a gutter 75
D - Under a balcony 300
E - From an adjacent window 300
F - From an adjacent air vent 300
G - From vertical drain pipes or soil pipes 75
H - From an external corner of the building 300
I - From an internal corner of the building 300
L - From the ground or from another floor 300
M - Between two terminals vertically 1500
N - Between two terminals horizontally 300

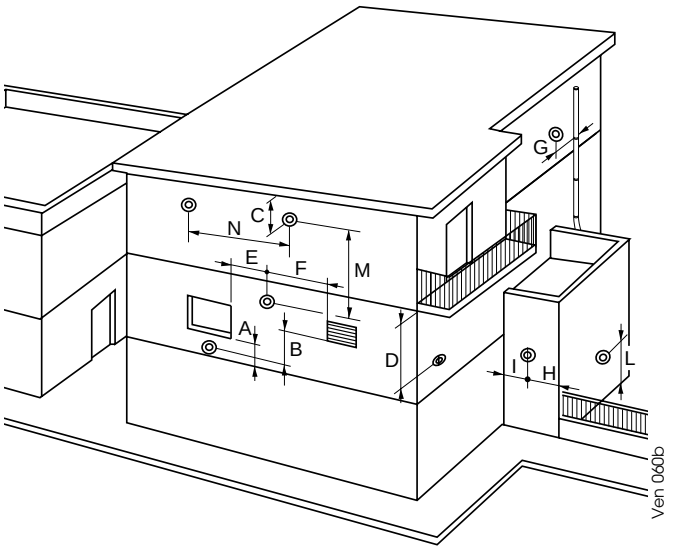

Diagram. 8

BOILER INSTALLATION

Statutory requirements
The installation of this boiler must be carried out by a competent person in accordance with the relevant requirements of the current issue of:

The Gas Safety (Installation and Use) Regulations
The Building Regulations
The local water company Byelaws
The Building Standards Regulations (Scotland)
The Health and Safety at Work Act

Sheet metal parts
WARNING. When installing or servicing this boiler, care should be taken when handling the edges of sheet metal parts to avoid the possibility of personal injury.

Diagram. 9

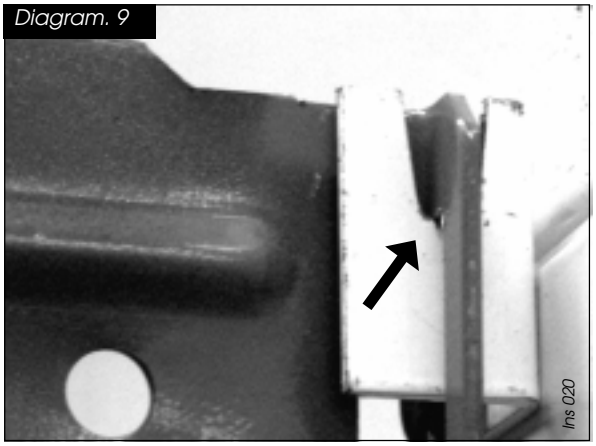

Installing the boiler
Prior to starting work, the system must be thoroughly flushed so as to eliminate any foreign bodies and contaminants such as filings, solder particles, oil, grease etc.
Note. Solvent products could cause damage to the system.
Note. If using a rear outlet flue system, follow the instructions in **'Rear outlet flue installation'** section prior to hanging the boiler.

• Engage boiler upper part onto the hook, **see diagram 9.**
• Allow the boiler to seat down onto support plate, **see diagram 10.**
• Fit filter and washers, strictly adhering to the sequential order and directions shown on **diagram 5.**
• Connect the various couplings between the boiler and the connection plate.

Diagram. 10

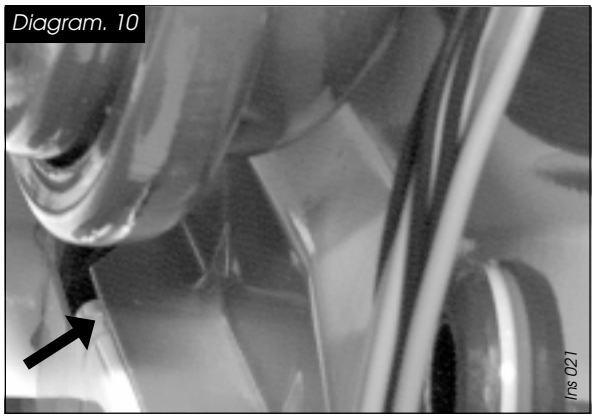

REAR OUTLET FLUE INSTALLATION

The boiler is supplied for rear outlet flue connection.
Alternatively, the boiler is designed to allow the flue system to be connected to the top of the boiler, top outlet flue connection.
For top outlet flue connection, refer to **'Top outlet flue installation'**

Rear outlet flue - kit 86151
The rear outlet flue system consists of two parts, a white painted outer pipe and an aluminium inner, they are positively locked together when assembled.

The flue kit 86151, **see diagram 11**, is 1000 mm long and comprises:
- Outer pipe ..... **A**
- Inner pipe ..... **B**
- External rubber sealing collar ..... **C**
- Flue elbow ..... **D**
- Internal flange ..... **E**
- 'O' rings ..... **F**
- Screws ..... **G**
- Rubber collar ..... **H**
- Clamp and seal ..... **I**
- Gasket ..... **J**

A - Direct rear outlet flue
Mark correct position of hole from template using hole between hook and connecting plate.

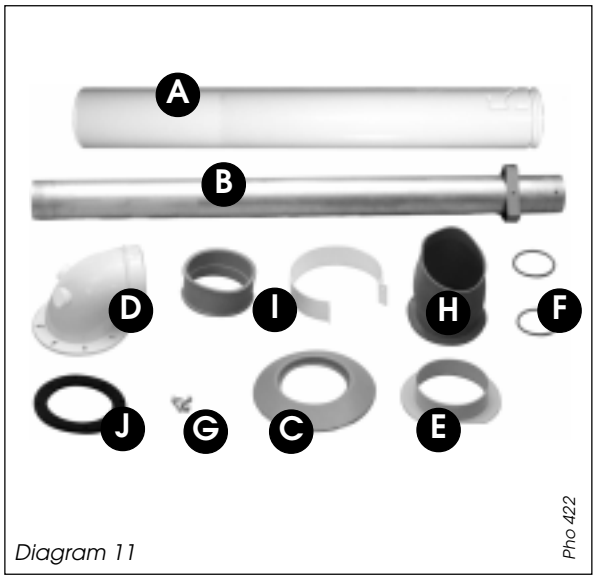

Diagram 11

B - Rear outlet side flue
Mark the horizontal centre line on the rear wall. Extend the horizontal centre line to the side wall and mark the vertical centre line of the flue hole as shown in **diagram 12.**

Important: When cutting the flue hole and when extending the flue centre line to a side wall, remember that the flue system must have a fall of about 35 mm per metre of flue DOWNWARD AWAY FROM the boiler. There must NEVER be a downward incline towards the boiler.

Cutting the flue hole
• Making allowance for the slope of the flue, cut hole in external wall, preferably using a core drill.
For installations with internal and external access - Use a 105 mm diameter core drill.
For installations with internal access only - Use a 125 mm diameter core drill.
Important: Before cutting the hole for flues to the rear of boiler, always cover fixing jig to make sure it is not damaged.

Calculation of flue cutting lengths
• Measure wall thickness **e** (mm).
• For side flues, measure distance from inside face of side wall to centre line of flue and subtract 176 mm for right hand flue or subtract 234 for left hand flue to get dimension **a** (mm), **see diagram 13** or **14.**
• Refer to **table 1** for cutting lengths of both inner and outer flue pipes for each of the various flue options available.
Important: All flue cutting lengths must be measured from the terminal end of the flue pipes, **see diagram 15**.
When the dimension **X** measured on site is greater than that given in **table 1,** a flue extension kit will be required, refer to **table 2** for details.

Refer to **table 1** for the cutting lengths of both the inner and outer pipes for each of the flue options available.

Table 1
Flue cutting lengths

Flue option	Cutting length (mm) outer pipe	Cutting length (mm) inner pipe	Comments
Rear outlet Side flue to left (Diagram 13)	e + a + 96	e + a + 173	maximum distance 'X' without extension 1080 mm
Rear outlet Side flue to right (Diagram 14)	e + a + 154	e + a +231	maximum distance 'x' without extension 1080 mm

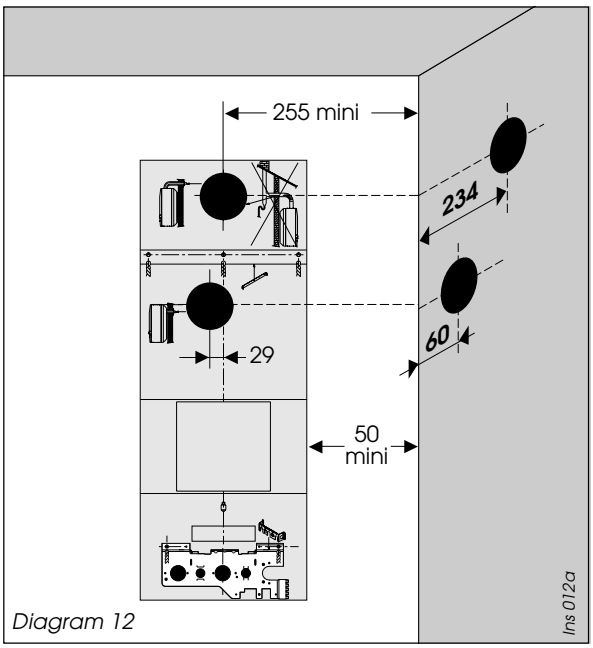

Diagram 12

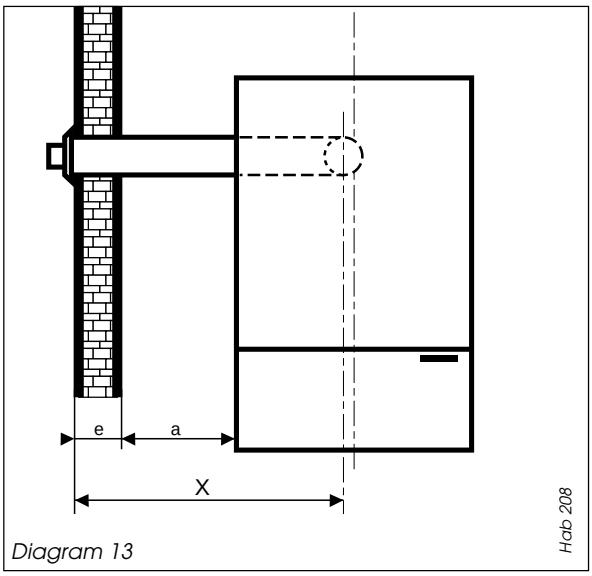

Diagram 13

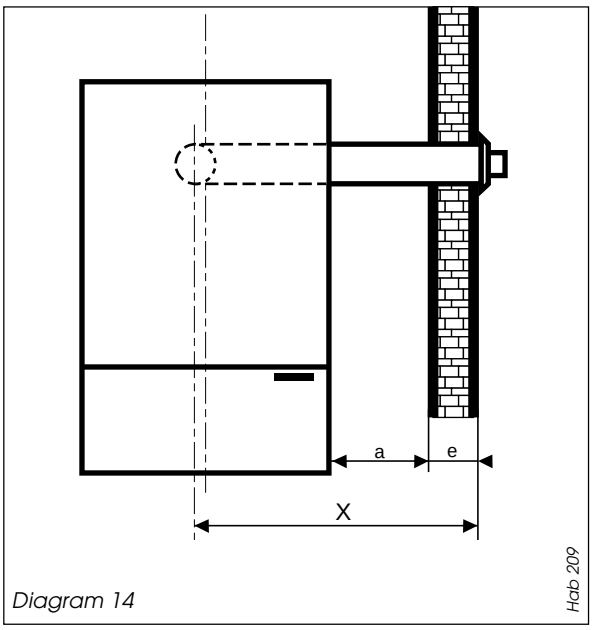

Diagram 14

Extended flue
The horizontal flue is extended by using one or more of the 1000 mm extension pipes, **Saunier Duval** part number 85091. These are connected together by push fit type joints, clamps and seals.

Calculation of flue cutting lengths for extended flue
• Using the correct number of extension kits as **table 2**, measure dimensions **a** and **e**, **see diagram 13** or **14.** Cut both the inner and outer pipe to the dimensions given in **table 3.**

Important: All cutting lengths should be measured from the push fit end of the extension pipe. Do not leave any burrs or sharp edges on the cut ends of the pipes.

Installation of flue assembly-direct rear flue
• Fit rubber sealing collar (**C**) into groove at the outer end of pipe (**A**), **see diagram 16.**
• Fit outer pipe (**A**) into wall with groove to the outside.
• Pull pipe inwards to bring rubber sealing collar hard up against external wall, **see diagram16.**
• Fit internal plastic flange (**F**) onto outer pipe. Push along the pipe until engaged against internal wall.
• From inside, insert inner pipe (**B**) into outer pipe turning anti-clockwise to allow inner to fully enter outer pipe.
• Fit rubber sleeve (**H**) onto outer pipe.
• Take hold of inner flue,twist clockwise and push gently onto fan outlet.
• Pull rubber sleeve onto boiler spigot ensuring a good seal.

Installation of flue assembly-side flue
• Fit rubber sealing collar (**C**) into groove at the outer end of pipe (**A**), **see diagram 16.**
• Fit outer pipe (**A**) into wall with groove to the outside.
• Pull pipe inwards to bring rubber sealing collar hard up against external wall, **see diagram16.**
• Fit internal plastic flange (**F**) onto outer pipe. Push along the pipe until engaged against internal wall.
• From inside, push inner pipe (**B**) into outer pipe turning anti-clockwise to allow inner to fully enter outer pipe.
• Fit rubber sleeve (**H**) onto outer pipe.
• Fit both 'O' rings **(F)** into flue elbow **(D)**, one at the inlet, one at the outlet. By necessity, they are a loose fit, apply a small amount of silicone grease to each 'O' ring when fitting.

Important: If the flue has been cut, ensure that there are no burrs that could damage the 'O' ring.

• Remove the backing from the self adhesive gasket **(J)** and carefully fit gasket to base of flue elbow.
• Fit elbow onto boiler and secure with the four screws **(G)**.
• Take hold of inner flue, twist clockwise and push gently onto the elbow outlet taking care not to tear the 'O' ring.
• Pull rubber sleeve onto elbow ensuring a good seal.

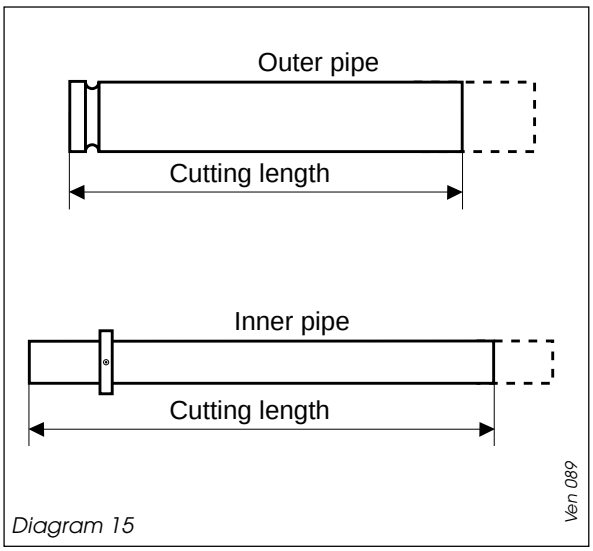

Diagram 15

Table 2
Number of extension kits required

Flue option	Dimension 'X'	No. of extension kits
Side flue (left or right)	1081 to 1811mm 1812 to 2542 mm	1 2

Table 3
Extended flue cutting lengths

	Cutting length (mm)		
Flue option	outer pipe	inner pipe	Comments
Rear outlet Side flue to left (Diagram 13)	e + a - 906	e + a + 829	maximum distance 'X' without extension 1080 mm
Rear outlet Side flue to right (Diagram 14)	e + a - 848	e + a + 771	maximum distance 'x' without extension 1080 mm

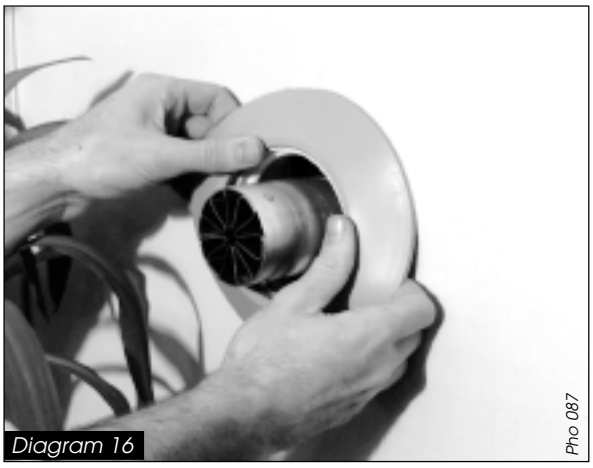

Diagram 16

TOP OUTLET FLUE INSTALLATION

Top outlet flue - kit 86151 see diagram 18, is 1000 mm long and comprises:
- Outer pipe ..... **A**
- Inner pipe ..... **B**
- External rubber sealing collar ..... **C**
- Flue elbow ..... **D**
- Internal flange ..... **E**
- 'O' rings ..... **F**
- Screws ..... **G**
- Rubber collar ..... **H**
- Clamp and seal ..... **I**
- Gasket ..... **J**

A - Flue to rear of boiler
• Mark correct position of hole from template.

B - Flue to side of boiler
• Mark horizontal centre line for hole on rear wall. Extend horizontal centre line to side wall and mark vertical centre line of flue hole as shown in **diag. 12.**

Under normal circumstances, it will be possible to gain access to the outside of the building to fit the flue terminal assembly. Where outside access is not possible e.g. high rise buildings, the flue terminal can be fitted from inside the building only if required.

Note : When cutting flue hole and when extending flue centre line to a side wall, remember that the flue system must have a fall of about 35 mm per metre of flue DOWNWARD AWAY FROM the boiler. There must NEVER be a downward incline towards the boiler.

Cutting the flue hole
• Making allowance for the slope of the flue, cut hole in external wall, preferably using a core drill.
For installations with internal and external access - Use a 105 mm diameter core drill.
For installations with internal access only - Use a 125 mm diameter core drill.
Important: Before cutting hole for flues to rear of boiler, always cover fixing jig to make sure it is not damaged.

Table 1 :

Flue Cutting length (mm)

Flue option	outer pipe	inner pipe	Comments
Top outlet Side flue to (left or right)	e + a + 125	e + a + 202	maximum distance 'X' without extension 1080 mm

Calculation of flue cutting lengths
• Measure wall thickness **e** (mm), **see diagram 17.**
• For side flues, measure distance from inside face of side wall to centre line of flue and subtract 205 mm for both right and left hand flues to get dimension **a** (mm).
• Refer to **table 1** for cutting lengths of both inner and outer flue pipes for each of the various flue options available.
Important: All flue cutting lengths must be measured from the terminal end of the flue pipes, **see diag. 15**.

When the dimension **X** measured on site is greater than that given in **table 1,** a flue extension kit will be required, refer to **table 2** for details.
Extended flue
The horizontal flue is extended by using one or more of the 1000 mm extension pipes, **Saunier Duval** part number 85091. These are connected together by push fit type joints, clamps and seals.

Calculation of flue cutting lengths for extended flue
• Using the correct number of extension kits as **table 3**, measure dimensions **a** and **e**, **see diagram 17**.
Important: All cutting lengths should be measured from the push fit end of the extension pipe. Do not leave any burrs or sharp edges on the cut ends of the pipes.

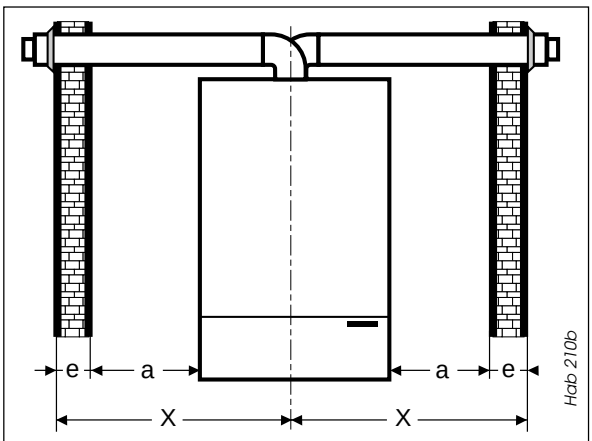

Diagram 17

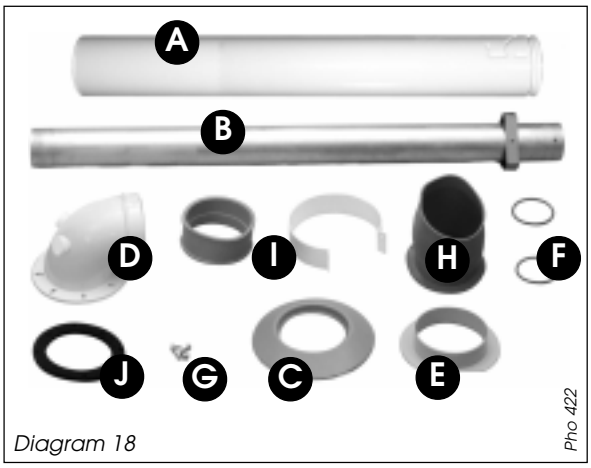

Diagram 18

Table 2 : Number of extension kits required

Flue option	Dimension 'X'	No. of extension kits
Side flue (left or right)	1081 to 1811 mm 1812 to 2542 mm	1 2

Table 3 :

Extended Flue Cutting length (mm)

Flue option	outer pipe	inner pipe	Comments
Top outlet Side flue to (left or right)	e + a + 877	e + a + 800	maximum distance 'X' without extension 1080 mm

Installation of flue assembly
• Fit rubber sealing collar (**C**) into groove at the outer end of pipe (**A**), **see diagram 18.**
• Fit outer pipe (**A**) into wall with the groove to the outside.
• Pull pipe inwards to bring rubber sealing collar hard up against external wall, **see diagram16.**
• Fit internal plastic flange (**E**) onto outer pipe. Push along the pipe until engaged against internal wall.
• From inside, insert inner pipe (**B**) into outer pipe.
• Fit both 'O' rings **(F)** into the flue elbow **(D)**, one at the inlet, one at the outlet. By necessity, they are a loose fit, apply a small amount of silicone grease to each 'O' ring when fitting.
Important: If the flue has been cut, ensure that there are no burrs that could damage the 'O' ring.
• Remove the backing from the self adhesive gasket **(J)** and carefully fit gasket to base of flue elbow.
• Fit elbow onto boiler and secure with the four screws **(G)**.
• Take hold of inner flue, twist clockwise and push gently onto the elbow outlet taking care not to tear the 'O' ring.
• Fit clamp and seal (**I**) onto outer pipe ensuring a good seal.

Warning. This boiler must be earthed
All system components must be of an approved type.
The mains electrical cable is supplied with the boiler. It is coiled ans tucked inside the boiler

Connection of the whole electrical system and any heating system controls to the electrical supply must be through a common isolator.
Isolation should preferably be by a double pole switched fused spur box having a minimum contact separation of 3 mm on each pole. The fused spur box should be readily accessible and preferably adjacent to the boiler. It should be identified as to its use.
A fused three pin plug and shuttered socket outlet may be used instead of a fused spur box provided that:
a) They are not used in a room containing a fixed bath or shower.
b) Both the plug and socket comply with the current issue of BS1363.
The mains electrical supply must be maintained at all times in order to provide domestic hot water.
Do not interrupt the mains supply with a time switch or programmer.

WARNING: ON NO ACCOUNT MUST ANY EXTERNAL VOLTAGE BE APPLIED TO ANY OF THE TERMINALS ON THE HEATING CONTROLS CONNECTION PLUG.

Warning: This appliance must be wired in accordance with these instructions. Any fault arising from incorrect wiring cannot be put right under the terms of the **Saunier Duval** guarantee.

Time clock
A mechanical or digital time clock is available as an accessory, Saunier Duval part N° 86148 (mechanical) or 86149 (digital).

External controls
The **THEMA** boiler is designed to operate at maximum efficiency at all times. The of a programmable electronic room thermostat is recommended for optimum performance, **Saunier Duval** part number 40010. Please contact your supplier.

The boiler will work for heating without a room thermostat and/or timeswitch being connected provided that the wire link fitted between the two terminals of the connector **(E)** is left in place, see **diagram 19.**

A 230V room thermostat can be used but do not make any connection to the compensating resistor, see **diagram 19.**
ON NO ACCOUNT must any electrical voltage be applied to any of the terminals of the external controls plug.

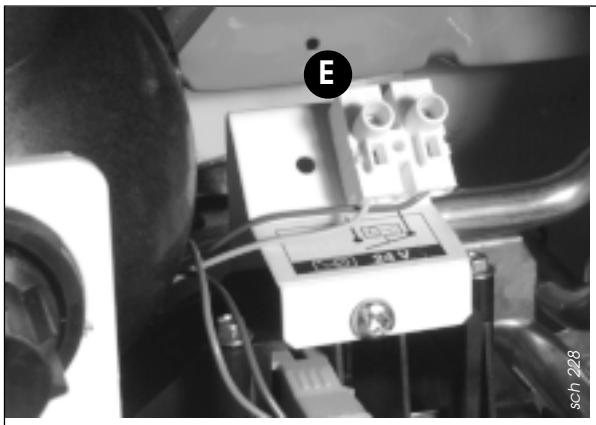

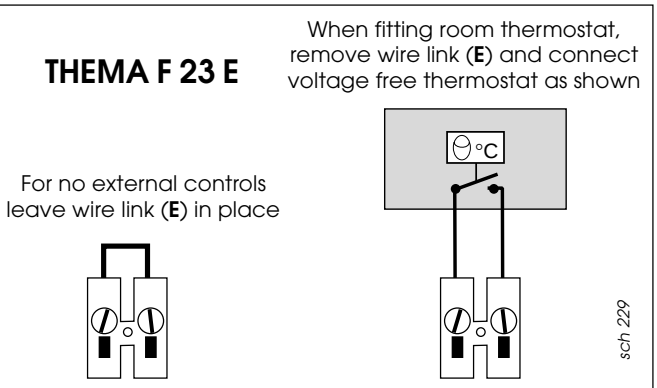

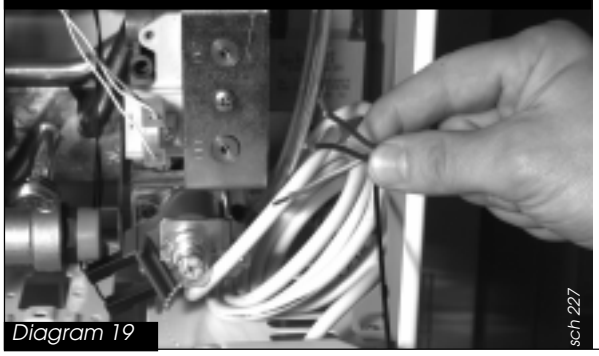

The mains electrical cable is supplied with the boiler. It is coiled and tucked inside the boiler

Diagram 19

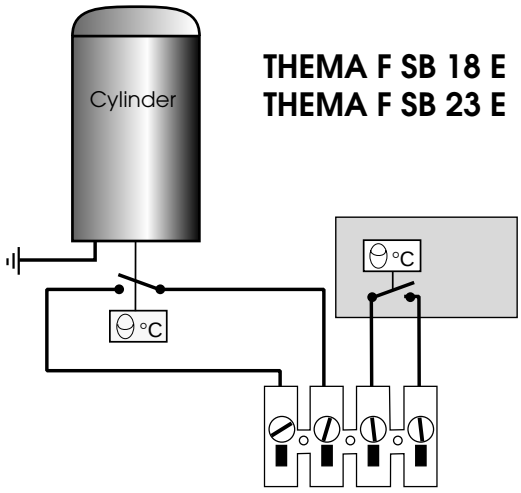

The commissioning and first firing of the boiler must only be done by a competent person.

Gas installation
It is recommended that any air is purged from the supply at the gas inlet test point on the left hand side of the gas valve, **see diagram 20.**

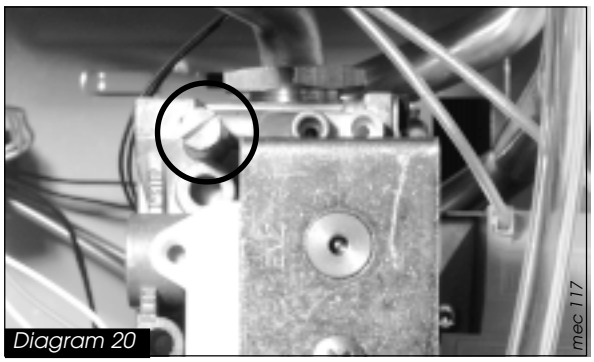

Diagram 20

Filling the system

1 Open shut off valves (slot of screw corresponds to flow direction).

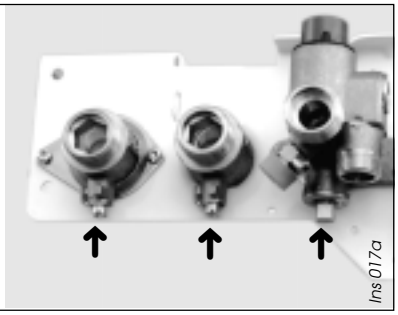

2 Undo, but do not remove, cap on automatic air vent on top of pump. Do not re-tighten cap.

3 Open the tap on the system filling loop and fill the system until the pressure indicated on the display is between 1 and 2 bar.

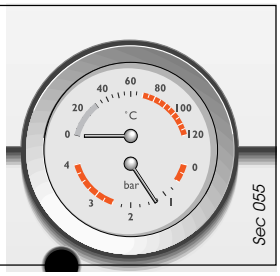

4 Bleed air from the heat exchanger by undoing the air bleed cap. Do not remove this cap. When all the air has been removed, tighten cap.

5 Bleed each radiator until a continuous jet of water is obtained.

6 Open various hot water taps to bleed system.

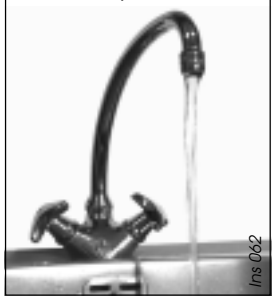

7 Make sure that pressure gauge reads between 1 and 2 bar. Re-pressurise system as necessary.

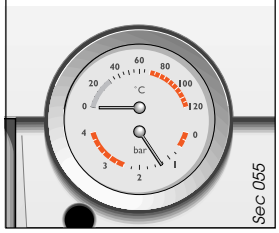

Important:
- If this procedure is not carried out properly, the boiler will go into safety lock-out until all of the air has been purged.
- When venting air from boiler, do not touch the schrader valve on the expansion vessel, it is NOT a vent.
- Before starting the boiler, turn the pump impellor to make sure it is free to move.
• Unscrew black cap on front of pump.
• Using screwdriver, push in pump spindle and turn pump impellor 3 to 4 times. DO NOT HIT SPINDLE. Replace black cap.

Starting the boiler
Before starting the boiler check that:
- The gas meter tap is open. If using Butane or Propane, check that valve on storage cylinder or tank is open.
- you have removed the two fan transist clips from fan.
- The boiler gas service cock is open.
- The boiler is connected to the electrical supply and switched on.
- The front casing is fitted.

First starting up
• Following the instructions given in the **'User Instructions'** set boiler to run in central heating mode.
• Set boiler thermostat for maximum temperature and check that any external controls, if fitted, are calling for heat.
• Allow the temperature to rise to the maximum value, with all radiator valves open.
The temperature rise will cause release of the gases contained in the water of central heating system.
- Gases driven towards the boiler will be automatically released through the automatic air vents.
- Gases trapped at the highest point of the system must be released by bleeding the radiators.

COMMISSIONING

On reaching maximum temperature, the boiler should be turned off and the system drained as rapidly as possible whilst still hot.
• Refill system to a pressure of 1 bar and vent as before.
• Restart boiler and operate until a maximum temperature is reached. Shut down boiler and vent heating system. If necessary, top up heating system and make sure that a pressure of 1 bar is indicated on the pressure gauge when system is COLD.

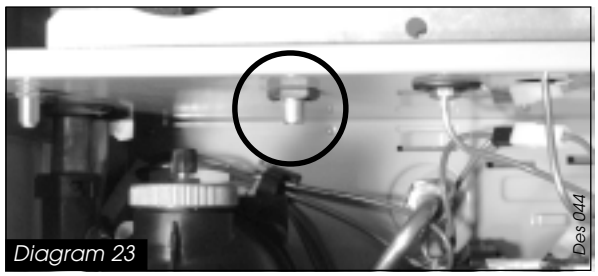

Diagram 23

Gas pressures
The main burner pressure should be checked during commissioning to make sure the correct input is obtained. Proceed as follows:
• Shut down boiler.
• Undo screw on burner pressure test point below sealed combustion chamber, **see diagram 23.**
• Connect a suitable pressure gauge.
• Gain access to the rear of the control panel and locate the range rating adjuster screw, **see diagram 24.**
• Start boiler as described in '**User Instructions**'.
• Set boiler thermostat to maximum and check that any external controls are calling for heat.
• Check that the reading on the gauge matches that given in '**Technical Data**' for the type of gas being used.
• Adjust the range rating adjuster screw as necessary to obtain the desired input.
• Shut down boiler.
• Remove pressure gauge, tighten up test point screws and check for gas soundness.
• Using a ball point pen, clearly indicate on the data label the input the boiler is set to.

Note: This adjustment does not affect the domestic hot water output.
If measured burner pressure differs greatly from the given figure, check the gas inlet pressure as follows:
• Shut down boiler.

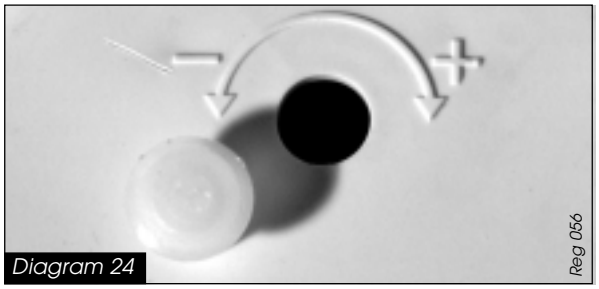

Diagram 24

• Remove screw from inlet test point on the side of the gas valve, **see diagram 23**.
• Connect a suitable pressure gauge.
• Start boiler as described in '**User Instructions**'.
• Check that the inlet pressure reading matches that given in '**Technical Data**' for the type of gas being used.
• Shut down boiler.
• Remove pressure gauge, tighten up test point screws and check for gas soundness.
• If the gas pressure is incorrect, refer to the Fault Finding section in '**Servicing Instructions**'.
• If the inlet pressure is below that given, the gas supply pipework/meter must be checked and any fault corrected.
• In the case of an LPG installation, check the storage tank or cylinder, regulator and pipework.

SAFETY DEVICES

Air flow rate safety device
If an obstruction, even partial, of the flue occurs, for any reason whatsoever, the built in safety system of the boiler will turn the boiler OFF and the fan will continue to run.
The boiler will be ready to operate when the fault has been cleared.

In case of power supply failure
The boiler no longer operates.
As soon as power supply is restored, the boiler will be automatically restarted.

Overheat safety
In the event of a problem, the overheat thermostat causes safety shutdown of the boiler. Should this occur, reset the thermostat by pressing in the red button. The overheat thermostat is located on the RHS of the heat exchanger.

Important notice: A central heating system cannot operate satisfactorily unless it is properly filled with water and unless the air initially contained in the piping systems has been properly bled off. If these conditions are not satisfied, air noise will occur within the system.

The **THEMA F 23 E** boiler has a built in frost protection device that protects the boiler from freezing. If the boiler is to be left and there is a risk of frost, ensure that the gas and electrical supplies are left connected and the summer/winter switch is in the ☀ position. The frost protection device will light the boiler when the temperature of the boiler water falls below 6°C. When the temperature reaches 16°C, the boiler stops.
Note: This device works irrespective of any room thermostat setting and only protects the boiler.

SETTINGS

Gas valve setting
All boilers are tested and factory set during manufacture. Should it be necessary to reset a gas valve, for example after replacement, proceed as follows:
• Shut down boiler.
• Connect a suitable pressure gauge as described in '**Commissioning**'.

Maximum setting
• Remove one electrical connector from the modulating gas valve coil.
• Turn the domestic hot water temperature adjuster to maximum setting.
• Remove the protective cover from the gas valve adjuster.
Using a 2 mm Ø rod, press in the spindle in the middle of screw **M, see diagram 25.**
• Turn nut '**B**' to obtain the desired pressure, see technical data.

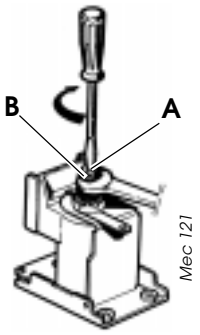

Minimum setting
This must be done AFTER the maximum setting.
• Hold not B to prevent from turning, turn nut '**A**' to obtain the desired pressure, see technical data.

After adjustment, refit the cover to the gas valve adjuster and refit electrical connector.

Bypass
The **THEMA F 23 E** has a built-in bypass. This must be adjusted according to the requirements of the system, refer to the flow rate pressure curve (**diagram 3**). The boiler is supplied with the built-in bypass open a half a turn. It is adjusted by turning the bypass screw (**a**), **see diagram 26**. Turn the screw clockwise to close the bypass.
When using thermostatic radiator valves (TRV's), it is recommended that an additional, adjustable bypass of 15 mm minimum diameter is fitted between the flow and return of the heating circuit, **see diagram 6**. Any bypass must be fitted before system controls.

PCB Settings
The PCB on the **Thema F 23 E** can be set to operate in different ways to suit individual installations. The dip switch SW1, **see diagram 27**, should be set as follows:

1 - OFF	4 - OFF
2 - ON	5 - OFF
3 - OFF	6 - OFF

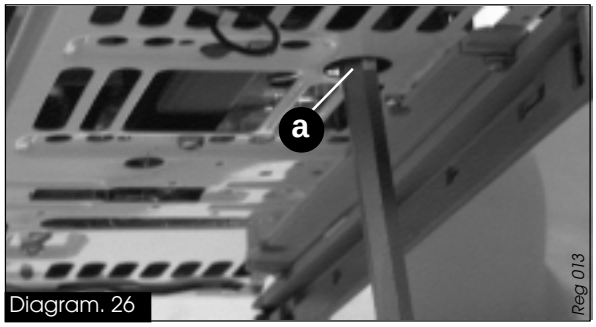

Diagram. 26

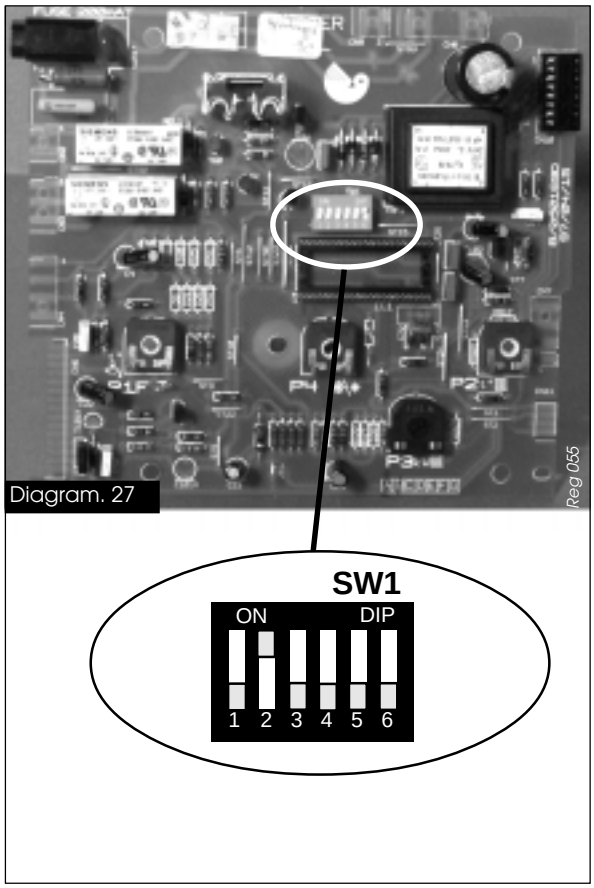

Diagram. 27

CHANGING GAS TYPE

Should it become necessary to change the gas type, a modification kit will be required.
This modification must only be carried out by a suitably qualified engineer.

Conversion: Natural Gas (G20) to G30/G31 Part No. 86161

ROUTINE CLEANING AND INSPECTION

To ensure the continued efficient and safe operation of the boiler it is recommended that it is checked and serviced at regular intervals. The frequency of servicing will depend upon the particular installation conditions and usage, but in general once a year should be enough.

It is the law that any servicing is carried out by a competent person.

Service Check and Preparation.
• Operate boiler and check for any faults that need to be put right.
• Isolate boiler from the gas and electrical supplies.
• On completion check all gas carrying parts for soundness with leak detection fluid.
• The maximum domestic hot water flow rate is 12 litres/minute.
• Remove boiler casing as follows:

Upper front panel
• Hinge down control cover to gain access to control panel.
• Disengage the two 'quarter turn' fasteners by turning the heads of the screws a quarter of a turn towards the centre of the boiler.
• Carefully lower the panel down on its hinge until it is horizontal.
• Turn both plastic catches to release upper front panel.
• Remove upper front panel by pulling forward at the bottom and lifting off.
Note: The upper front panel is retained by a plastic safety strap, disengage this before removal.

Side panels
• From below boiler, unscrew and remove black plastic screws securing side panels to the boiler.
• Prise out black plastic inserts and lift panel off boiler.

Combustion chamber
• Loosen two wing nuts on combustion chamber cover.
• Disengage retaining lugs from holes in either side of combustion chamber and move rods away to clear combustion chamber sides, **see diagram 28.**
• Unclip two toggle clips holding upper part of combustion chamber in place.
• Holding both sides, pull chamber forward to release it from underside of heat exchanger and out of boiler.
• Take care not to damage insulation material on inside faces of combustion chamber.

Cleaning the burner
• Pull off leads to ignition electrode.
• Pull off lead to flame sense electrode.
• Unscrew and remove screw holding earth lead to flame sense electrode.
• Undo main gas supply nut from main burner.
• Unscrew and remove locking nut from both main gas connection and burner pressure tapping point.
• Lift front edge of burner until tapping point and gas supply connection are free. Remove burner

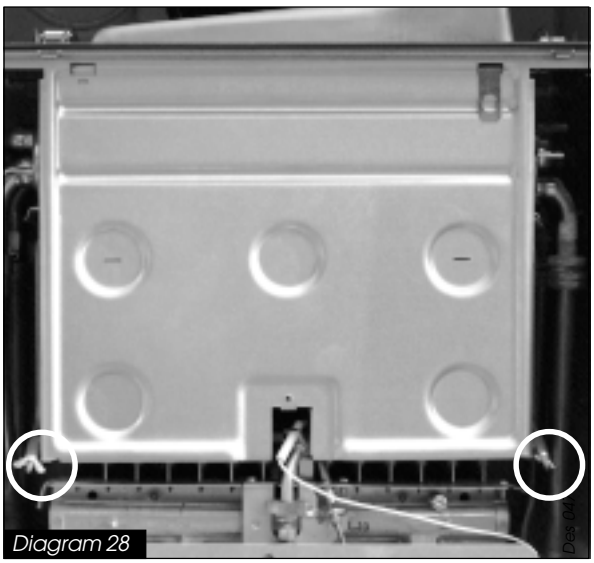
Diagram 28

from boiler taking care to retain both fibre washers and seal on gas supply for use on reassembly.
• Unscrew and remove two injector bar retaining screws and separate injector bar from burner.
• Examine and clean injectors as necessary.
Note: Do not use a wire or sharp instrument on the holes.
• Replace burner in reverse order to removal.

Heat exchanger
• After removal of burner, examine heat exchanger for any blockages or build up of deposits.
• Clean using soft brush or vacuum cleaner.
Important: Take care not to scratch or otherwise damage painted surface of heat exchanger.

Reassembly of parts removed for servicing
• Replace all parts in reverse order to removal.

Flue system
• Check externally to make sure flue is not blocked.
• Inspect flue system to make sure all fittings are secure.

Operation of fan
• Switch on electrical supply and turn on gas.
• Switch boiler On/Off switch to 1 (On).
• Light burner by opening a hot tap.
• Without upper front panel in place, burner should be prevented from lighting by air flow detection system.
• Refit upper front panel.
• Check that fan runs when burner is lit and stops when it goes out.

Cold water inlet filter (exept SB models)
• Drain down hot water circuit of boiler as follows:
• Close isolating valve on cold water inlet connection on fixing jig, **see diagram 5.**
• Open one or more hot water taps to drain boiler.
• Undo connecting nut from cold water inlet connection to gain access to filter.
• Remove white filter from inlet connection.

ROUTINE CLEANING AND INSPECTION

Note: Connecting pipework is telescopic, it may be necessary to slide sleeve back for easier access to filter.
• Clean and inspect filter, replace if necessary.
• With both flow restrictor and filter in place, reconnect pipe to inlet connection and tighten.
• Fully open isolating cock on cold water inlet connection and check for leaks.

Operation of water valve (exept SB models)
• With the Summer/Winter control in the 'Summer' position, slowly open a convenient tap until boiler lights.
• Measure water flow, it should not be greater than 3,5 litres/minute.
• If necessary, replace diaphragm.
• Replace all outer panels.

REPLACEMENT OF PARTS

To replace microswitch assembly exept SB models)
• Disconnect microswitch by pulling off plug.
• Unclip external controls connector from mounting bracket.
• Undo two screws securing microswitch assembly to reversing valve assembly, **see diagram 29.**
• Remove microswitch assembly from reversing valve.
• Fit replacement microswitch assembly in reverse order to removal.
• Reconnect plug and refit external controls connection to bracket.

To replace fan
• Disconnect power supply and earth leads to fan.
• Unscrew and remove two fan retaining screws located at front edge of fan mounting plate.
• Remove fan with mounting plate attached by pulling forwards and out of boiler.
• Unscrew and remove three screws securing fan to fan mounting plate.
• Fit replacement fan to mounting plate and secure with screws.
• Fit replacement fan to boiler in reverse order to removal making sure that mounting plate retaining lugs are properly engaged into flue hood.
• Reconnect power supply and earth leads.
Important: Make sure that fan outlet is correctly fitted into either the flue elbow for top outlet flue, or the rear connector for rear outlet flue.
Before commissioning boiler, remove the two plastic transit clips from replacement fan.

To replace air pressure switch
• Locate air pressure switch in upper left hand corner of sealed chamber.
• Pull off plastic tube from left hand connection.
• Grasp pressure switch and disengage it from bracket clips by pulling from the top.
• Remove electrical connections from switch.
• Fit electrical connections to terminals 1 and 3 of replacement switch.
• Fit replacement switch in reverse order to removal.
Important: Refit plastic tube to LEFT hand connector (marked P1).

To replace spark generator
• Locate spark generator on bracket to right hand side of gas valve.
• Undo and remove screw securing lower terminal cover to bracket and remove bracket.
• Disconnect four leads from spark generator.

microswitch on THEMA F 23 E

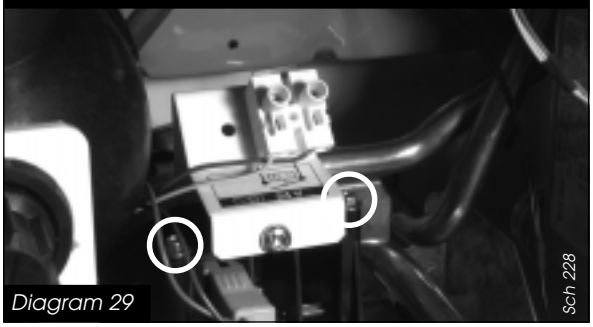

Diagram 29

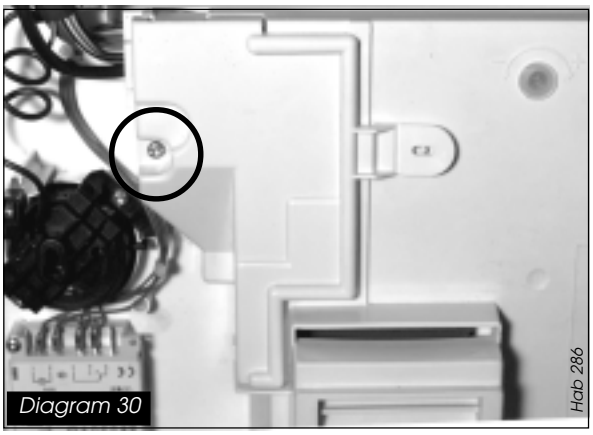

Diagram 30

• Undo and remove screw securing spark generator to bracket and remove spark generator.
• Fit replacement spark generator in reverse order to removal.
• Reconnect two grey power supply leads and two clear ignition leads to spark generator, the polarity is not important.
• Refit lower terminal cover.

To replace main printed circuit board (PCB)
• With lower front panel down as described previously, undo and remove screw holding pump connection cover to PCB cover, **see diagram 30.**
• Open cover and unclip plastic clip securing pump cable to lower front panel.
• Pull off pump connector and earth lead.
• Undo and remove four screws securing PCB cover to lower front panel.
• Lift off PCB cover.
• Pull off connectors CN6, CN7, CN8 and CN9 on PCB.
• Undo and remove screw holding PCB to lower front panel.
• Lifting PCB up slightly on LHS, pull PCB out of electrical connector on ignition PCB. Leave ignition PCB in place.

• Fit replacement PCB in reverse order to removal.
Important: When fitting replacement PCB, ensure that control knob spindles correctly locate into PCB adjuster slots.
• Refit connectors and covers in reverse order to removal.

To replace ignition PCB
• Gain access to PCB's as described in previous section.
• Remove main PCB securing screw as described in previous section.
• Pull off three electrical connectors on PCB.
• Lift up ignition PCB, separate from main PCB and remove from boiler.
• Fit replacement PCB in reverse order to removal.
• Refit connectors and covers in reverse order to removal.

To replace pump
• Drain down heating circuit of boiler only as follows:
• Close isolating valves on flow and return connections on fixing jig, **see diagram 5.**
Note: These valves are closed when slots are at right angles to direction of flow.
It is not necessary to drain entire heating circuit to carry out this work.
• Drain boiler by attaching a plastic tube to drain outlet and opening drain valve knob anticlockwise, **see diagram 5.**
• Gain access to pump connection as described in '**To replace main PCB'.**
• Pull off pump connector and earth lead.
• Pull out retaining clip from telescopic pump outlet connection and slide connection upwards to release from pump.
• Undo and remove two fixing screws and remove pump retaining bracket from front of pump.
• Grasp pump body, lift upward to disengage from reversing valve and turn pump to right. Remove pump by pulling forward and over reversing valve assembly.
• Discard old pump inlet 'O' ring.
• Apply silicone grease to new 'O' ring supplied, and fit onto inlet connection on replacement pump.
• Fit replacement pump in reverse order to removal.
Note: Apply silicone grease to pump outlet connection 'O' ring before assembly.
• Refit pump electrical connection.
• Open isolating valves on flow and return connections, refill, vent and pressurise boiler. Check for leaks.

To replace temperature/pressure gauge
• Drain down heating circuit of boiler only as described in '**To replace pump'.**
• Undo and remove screw securing pressure gauge capillary to front section, **see diagram 31.**
• Carefully pull capillary from front section.
• Undo and remove two screws securing temperature/pressure gauge to lower front panel and remove gauge.
• Fit replacement gauge in reverse order to removal.

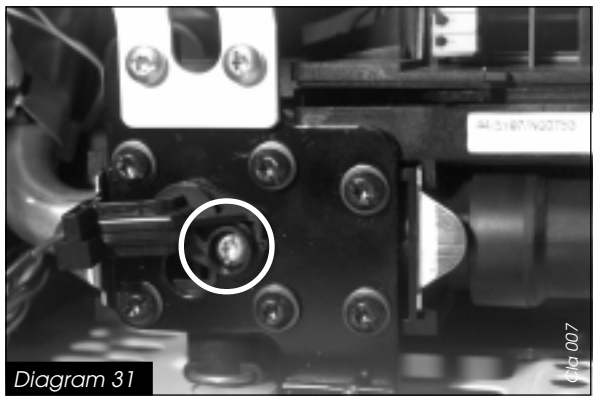
Diagram 31
Cla 007

Diagram 32
Des 054

• Fit capillary of new gauge to front section using new 'O' ring supplied.
• Open isolating valves on flow and return connections, refill, vent and pressurise boiler. Check for leaks.

To replace reversing valve assembly
• Remove temperature/pressure gauge capillary as described previously.
• Remove pump as described previously.
• Remove microswitch assembly as described previously.
• Remove retaining clip from LHS pipe connection on front section of valve and disengage pipe.
• Unscrew and disconnect heating flow (centre) connection at fixing jig.
• Remove retaining clip from heating flow pipe connection on right of front section.
• Remove flow pipe from boiler.
• Unscrew and disconnect heating return (left hand) connection at fixing jig.
• Remove retaining clip from expansion vessel pipe connection at rear of reversing valve assembly and disengage pipe, pushing pipe back and out of reversing valve.
• Undo and remove large screw holding water valve to back plate of reversing valve assembly, **see diagram 32.**

• Push water valve back to disengage it from reversing valve.
• Unclip and remove loss of water pressure switch from left of reversing valve assembly, **see diagram 33.**
• From below boiler, undo and remove three screws holding reversing valve to bottom plate of boiler. Remove complete reversing valve assembly from boiler.
• Undo and remove heating return connecting pipe and hose from rear of reversing valve assembly. Fit hose to replacement reversing valve assembly.
• Fit replacement reversing valve into boiler in reverse order to removal.
Note: Use new 'O' rings, retaining clip, filter and washer provided.
• Unscrew and remove microswitch assembly from top of replacement reversing valve assembly to allow refitting of water valve.
Note: fit expansion vessel pipe and loss of water switch to reversing valve assembly before pump, to ensure that it is correctly located. Apply silicone grease to all 'O' rings and hoses prior to assembly.
• Open isolating valves on flow and return connections, refill, vent and pressurise boiler. Check for leaks.

To replace reversing valve front section
• Remove pressure gauge capillary as described previously.
• Remove pipe connections from either side of reversing valve front section, refer to previous section.
• Move short selector lever on front of valve to left hand position.
• From below boiler, undo and remove single screw holding reversing valve front plate to bottom plate of boiler.
• Undo and remove six screws holding front section to rear section of reversing valve, **see diagram 34.**
• Remove front plate complete with pump bracket and then front section from reversing valve, along with rubber sealing gasket.
• Assemble bypass valve provided and fit into hole in underside of replacement front section. Fit 'U' shaped retaining clip.
Note: Use bypass valve fitted to original front section for guidance.
• Fit replacement front section, with gasket, to rear section.
• Locate front plate and replace six fixing screws. Take care to evenly tighten screws ensuring they are not cross threaded.
• Refit pipe connections to either side of front section using new 'O' rings provided. Apply silicone grease to 'O' rings before fitting.
• Refit pressure gauge capillary in reverse order to removal.
• Ensure short selector lever on front of valve is set to right hand position.
• Open isolating valves on flow and return connections, refill, vent and pressurise boiler. Check for leaks.

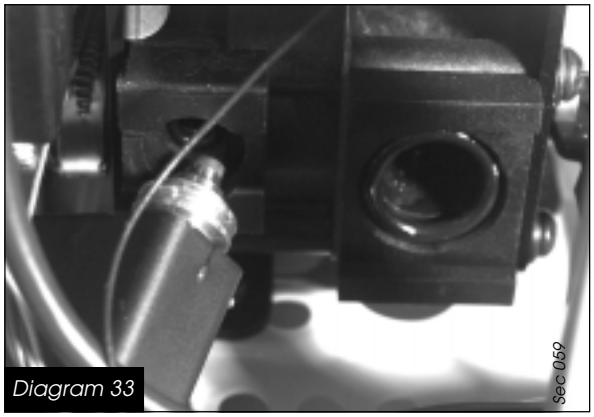
Diagram 33

Diagram 34

To replace loss of water switch
• Drain down heating circuit of boiler only as described in **'To replace pump'.**
Note: It is not necessary to drain entire heating circuit to carry out this work.
• Pinch plastic cover to release retaing clips and remove cover from switch. Pull plug lead from switch terminals.
• Remove clip holding switch into left side of reversing valve assembly.
• Pull switch out of reversing valve assembly, **see diagram 33.**
• Fit replacement switch in reverse order to removal, using new 'O' ring provided and applying silicone grease to 'O' ring before fitting.
• Reconnect plug to switch terminals.
• Open isolating valves on flow and return connections, refill, vent and pressurise boiler. Check for leaks.

To replace water valve or diaphragm (except SB models)
• Drain down hot water circuit of boiler only as described in **'Routine Cleaning and Inspection'.**
• Remove microswitch assembly as described previously.
• Unscrew connecting nut from cold water inlet connection, second from left on fixing jig. Keep filter and flow regulator.
• Remove clip holding connecting pipe in rear of water valve. From below boiler, grip clip with long nosed pliers and pull down.
Note: This connecting pipe is telescopic, it may be necessary to slide back brass sleeve to facilitate removal.

• Remove clip holding pipe to heat exchanger in rear of water valve. From front of boiler, grip clip with long nosed pliers and pull upwards.
• Unscrew and remove large screw holding water valve to back plate of reversing valve assembly, **see diagram 32.**
• Disengage water valve from reversing valve and remove from boiler.
Note: When disengaging water valve from heat exchanger pipe, check that non-return valve is not held on end of pipe. If so, carefully separate pipe from valve to ensure that small spring and plunger do not fly out and are lost.
• To replace diaphragm, undo five screws and separate main components of water valve.
• If white diaphragm cover is to be replaced, separate original from water valve end casting and fit replacement cover.
• Fit replacement diaphragm , making sure that metal disc FACES diaphragm cover and beaded edge of diaphragm is correctly fitted in corresponding groove in both cover and plastic housing, **see diagram 35.**
• Reassemble water valve, evenly tightening five screws.
• Fit water valve actuating pin into hole in diaphragm cover, through nose end of valve and and push in until flush, or slightly below, nose end of valve.
Note: Apply silicone grease to pin before fitting.
• Refit water valve to boiler, locating nose end into rear of reversing valve assembly, 'springing' heat exchanger pipe to gain clearance as necessary. Fit large water valve retaining screw but do not tighten fully at this stage.
• Apply silicone grease to 'O' ring and fit onto end of heat exchanger pipe. Fit pipe into water valve by pulling it forward. Make sure that 'O' ring is correctly located.
• Whilst holding pipe in rear of water valve, fit retaining clip. This should easily clip over pipe and should NOT have to be forced. If resistance is experienced, either pipe is not correctly fitted in rear of water valve or clip is not being fitted properly through slot between back plate and plastic housing of water valve. When clip is fitted, check connection by pushing pipe back away from water valve.
• Refit telescopic connecting pipe to inlet of water valve after applying silicone grease to 'O' ring. Fit retaining clip into groove on connecting pipe, through slot between back plate and water valve plastic housing. Check connection by pulling pipe. Make sure that clip is not loose and likely to fall out at a later date. If in doubt, fit a new clip.
• With both flow regulator and and plastic filter washer in place, refit connecting nut to inlet connection and tighten.
• Open isolating valve on cold water inlet connection and check for leaks.
• Replace microswitch assembly.

To replace gas valve
• Ensure gas supply is off.
• Disconnect two black electrical leads from gas valve modulating coil.

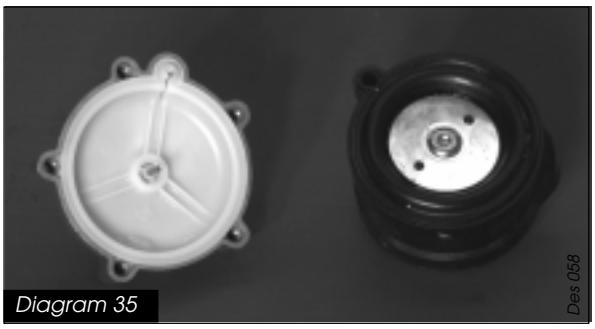

Diagram 35

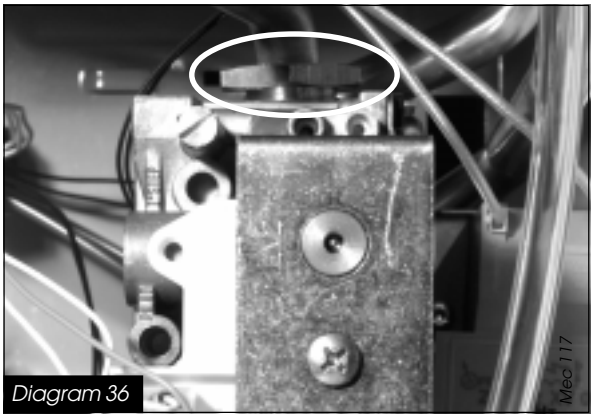

Diagram 36

• Disconnect two white and one red lead from gas valve main solenoid.
• Pull off clear plastic tube from gas valve to sealed chamber tapping point.
• Unscrew main gas supply pipe nut on top of gas valve, releasing spark ignition unit bracket, **see diagram 36.**
• From below boiler, unscrew gas valve connection between gas valve and fixing jig isolating cock.
• Unscrew and remove two screws securing gas valve to bottom plate of boiler.
• Remove gas valve from boiler.
• Refit replacement gas valve in reverse order to removal.
Note: Use new 'O' ring provided between gas valve and burner supply pipe.
• Refit electrical connections to replacement gas valve as follows:
- BLACK leads to modulating coil.
- WHITE leads to EV1 and EV2 terminals of main solenoid
- RED lead to COM terminal of main solenoid.

To replace modulating coil
• Ensure gas supply is off.
• Disconnect two black electrical leads from gas valve modulating coil.
• Unscrew and remove two screws holding modulating coil to gas valve and remove coil from gas valve.
• Fit replacement modulating coil in recerse order to removal.
• Reconnect electrical leads to replacement coil.
Note: All boilers are tested and factory set during manufacture. Should it be necessary to reset a gas valve, for example after replacement, refer to **'Settings'.**

To replace safety valve
• Drain down entire heating system.
• From below boiler, disconnect heating flow pipe from rear of fixing jig.
• Undo heating flow connection on front of fixing jig. Remove clip from heating flow pipe connection on right of front section of reversing valve. Pull pipe towards right and out of reversing valve. Remove pipe from boiler and keep.
• From below boiler, disconnect safety valve discharge pipe.
• Working through boiler from the front using a long screwdriver, undo and remove screw holding safety valve assembly to fixing jig.
• Remove complete safety valve assembly from fixing jig and remove from boiler.
• Fit replacement safety valve in reverse order to removal.
Note: Apply silicone grease to 'O' ring before fixing pipe into right hand side of reversing valve.
• Refill heating system and boiler, vent and pressurise as described previously.

To replace heat exchanger
• Drain down both heating and hot water circuits of boiler only as described previously.
Note: It is not necessary to drain entire heating system to carry out this work.
• Remove combustion chamber cover as described in **'Routine Cleaning and Inspection'.**
• Remove two clips from heating connections to left side of heat exchanger.
• Remove clip holding pump outlet connection into pump and slide connection up pump outlet pipe. Pull complete pipe down to disengage from heat exchanger.
• Remove retaining clip from LHS pipe connection on front section of valve and disengage pipe.
• Disengage pipe downwards from heat exchanger.
• Unscrew and disconnect two hot water connections to right side of heat exchanger.
• Grasp both sides of heat exchanger and slide forwards and out of boiler.
• Fit replacement heat exchanger in reverse order to removal.
Note: Use new sealing washers and 'O' rings provided.
• Open isolating valves on flow and return connections, refill, vent and pressurise boiler. Check for leaks.

To replace expansion vessel
1 Boiler in place
Note: The expansion vessel can be replaced with the boiler in place provided that there is a minimum clearance of 400mm on one side of the boiler and that no vertical pipework passes between boiler and wall on that side.
• Drain down the heating circuit of the boiler only as described in **'To replace pump'.**
Note: It is not necessary to drain entire heating system to carry out this work.
• Remove pump from boiler as described previously.
• Unscrew pipe connection nut from expansion vessel and disengage pipe from connection. Keep sealing washer.
• Whilst supporting weight of vessel, push bottom of vessel away from boiler, disengaging threaded connection from hole in rear of boiler. Allow vessel to drop out of its two upper retaining brackets.
• Remove vessel to side of boiler.
• Fit replacement expansion vessel in reverse order to removal ensuring that sealing washer is fitted to vessel pipe connection.
• Check that vessel charge pressure is 1bar. Correct if necessary.
• Open isolating valves on flow and return connections, refill, vent and pressurise boiler. Check for leaks.

2 Boiler removed from wall
• Drain down the heating circuit of the boiler only as described in **'To replace pump'.**
Note: It is not necessary to drain entire heating system to carry out this work.
• Ensure that gas and electrical supplies to boiler are turned off.
• Disconnect flue from either rear or top of boiler as applicable.
• Disconnect external controls connections, if applicable.
• Unscrew and disconnect five connections between fixing jig and boiler.
• Disengage pipe connections. Lift boiler off hanging bracket and place on a convenient working surface.
• Remove expansion vessel from boiler as described in previous section.
• Fit replacement vessel in reverse order to removal and check charge pressure.
• Replace boiler on wall, tighten all connections, gas connection first, ensuring that all sealing washers, filters and the cold water flow regulator are fitted before tightening.
• Reconnect flue system.
• Open isolating valves on flow and return connections, refill, vent and pressurise boiler. Check for leaks.
• Reconnect external controls connections, if applicable.
• Reconnect gas and electrical supplies to boiler.
• Check for gas soundness.

To replace boiler thermistor
• Locate boiler thermistor on heating flow pipe on left hand side of boiler, **see diagram 37.**

Diagram 37

• Unclip thermistor from pipe.
• Pull off electrical cennections from thermistor.
• Fit replacement thermistor in reverse order to removal.
Note: No heat sink compound is required. The polarity of the connections is not important.

To replace overheat thermostat
• Locate the overheat thermostat on the right hand side of the heat exchanger.
• Pull off the electrical connections from the thermostat.
• Unscrew and remove two screws holding thermostat to heat exchanger.
• Fit replacement thermostat in reverse order to removal, using heat sink compound on the contact surface of thermostat.
• Refit electrical leads, the polarity is not important.

To replace combustion chamber insulation
Front section
• Remove combustion chamber from boiler as described in '**Routine Cleaning and Inspection'**.
• Slide side panels out of combustion chamber sides.
• Lift front insulation panel free from retaining lugs and away from cover.
• Fit replacement panels in reverse order to removal.

Rear panel
• Remove burner from boiler as described in '**Routine Cleaning and Inspection'**.
• Remove clip from base of insulation panel.
• Pull bottom edge of insulation panel forward, downward and out from behind heat exchanger.
• Fit replacement panel in reverse order to removal.
• Replace burner into boiler in reverse order to removal.

To replace ignition electrode
• Remove combustion chamber from boiler as described in '**Routine Cleaning and Inspection'**.
• Pull off ignition leads from ignition electrode.
• Unscrew and remove two screws holding ignition electrode onto burner.
• Fit replacement ignition electrode in reverse order to removal.
• Refit ignition leads, the polarity is not important.

To replace flame sense electrode
• Remove combustion chamber from boiler as described in '**Routine Cleaning and Inspection'**.
• Pull off lead from flame sense electrode.
• Unscrew and remove screw holding earth lead to flame sense electrode.
• Unscrew and remove screw holding flame sense electrode onto burner.
• Fit replacement flame sense electrode in reverse order to removal.
• Refit lead.

To replace burner
• Pull off ignition and flame sense leads from electrodes.
• Remove burner from boiler as described in '**Routine Cleaning and Inspection'**.
• Remove ignition and flame sense electrodes as described in previous sections.
• Unscrew and remove two screws holding burner injector bar to burner and remove injector bar.
• Asemble replacement burner, supplied in parts, as follows:
• Fit burner injectors to injector bar and tighten.
• Assemble burner elements (14) into front and rear burner supports with securing pins and rods, using original burner for guidance.
• Fit burner injector bar to burner.
• Fit ignition and flame sense electrodes to burner.
• Fit replacement burner to boiler in reverse order to removal.
• Reconnect ignition and flame sense leads to electrodes. Reconnect earth lead to flame sense electrode. The polarity of the ignition leads is not important.

To replace burner injectors
• Remove burner as described previously.
• Remove ignition and flame sense electrodes as described in previous sections.
• Unscrew and remove two screws holding burner injector bar to burner and remove injector bar.
• Unscrew and remove burner injectors from burner bar.
• Fit replacement injectors to injector bar and tighten.
Note: make sure that injector size, marked on each injector, is the same as that given in **'Technical Data'.**
• Reassemble burner and replace into boiler in reverse order to removal.

To replace timeclock
• Gain access to rear of lower control panel as described in '**Routine Cleaning and Inspection'**.
• Unscrew and remove two screws holding timeclock to lower control panel.
• Remove PCB cover.
• Remove timeclock plug from connection CN7 on main PCB.
• Fit replacement timeclock in reverse order to removal.

THEMA F 23 E PCB

IG - ON/OFF switch
P - Pump
SW3 - Microswitch
K4 - Hight limit thermostat
K5 - Loss of water switch
EV1 - Gas valve modulating coil
TA - Room thermostat (if fitted)
CTN - Boiler thermistor
EV - Gas valve
AL - Ignition unit
FA - Ignition electrode
FL - Flame sense electrode
TRA - Transformer
Pr - Air pressure switch
EX - Fan

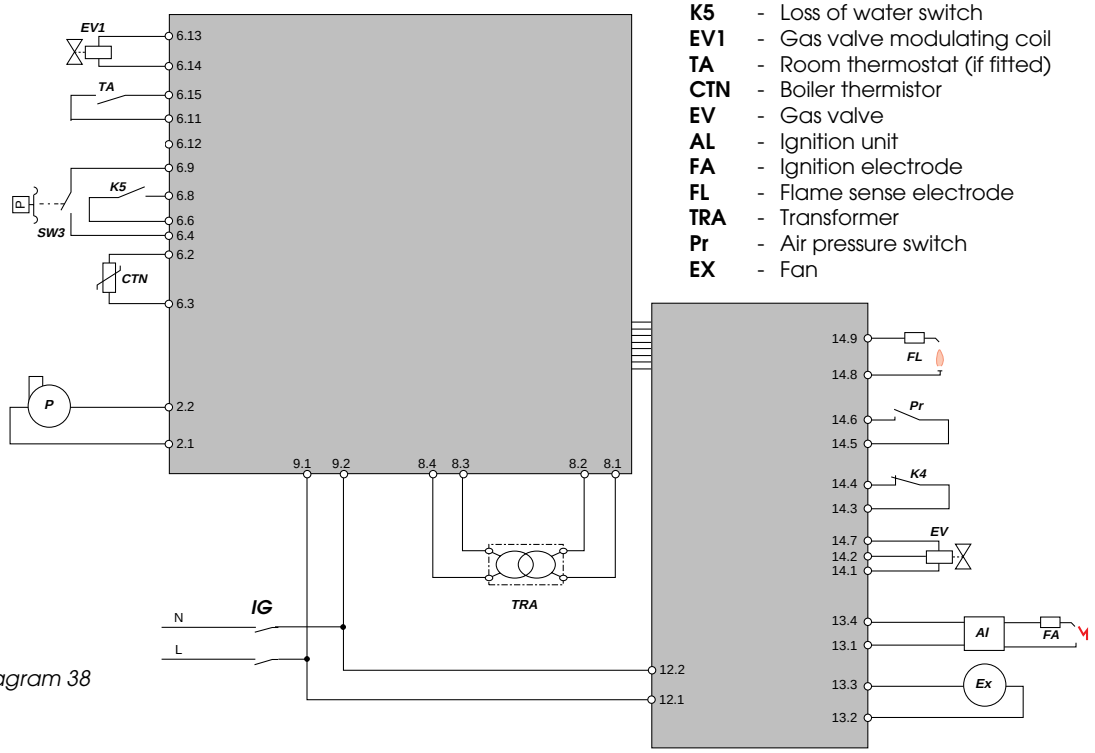

Diagram 38

Sch 242

THEMA F SB 18 E and THEMA F SB 23 E PCB

IG - ON/OFF switch
P - Pump
K4 - Hight limit thermostat
K5 - Loss of water switch
EV1 - Gas valve modulating coil
TA - Room thermostat (if fitted)
CTN - Boiler thermistor
EV - Gas valve
AL - Ignition unit
FA - Ignition electrode
FL - Flame sense electrode
TRA - Transformer
Pr - Air pressure switch
EX - Fan
TH - Cylinder thermostat

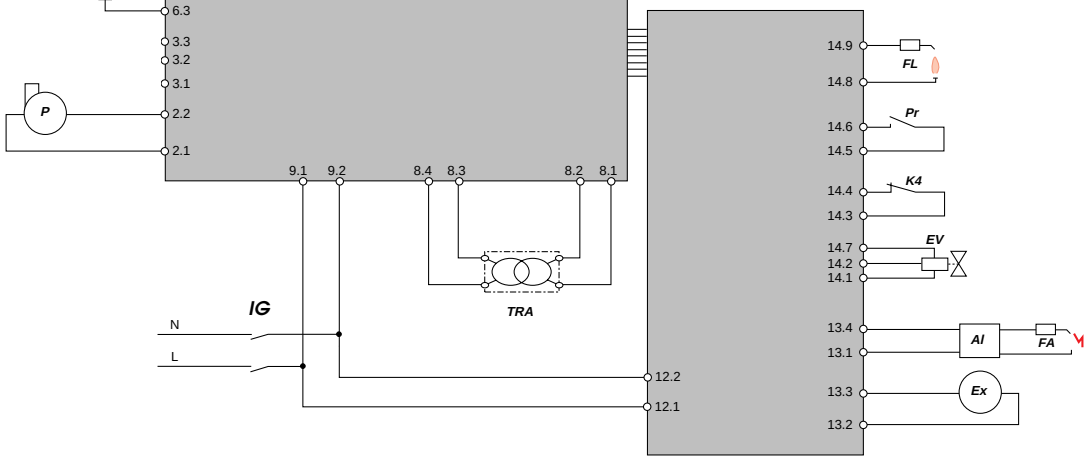

Diagram 39

Sch 240

FAULT FINDING

Prior to fault finding, check :
Inlet gas pressure = 20 mbar
Electrical supply = 240 V - 50 Hz
Central heating system is pressurised at 1 - 1,5 bar.
Overheat thermostat on RHS of heat exchanger has not tripped reset if necessary.

Carry out electrical system checks i.e. earth continuity, resistance to earth, short circuit and polarity with a suitable meter.
Note : these must be repeated after any servicing or fault finding. Ensure that all external controls are correctly wired and calling for heat.

The fault finding charts will enable the majority of faults to be diagnosed. To use the charts effectively, it is necessary to determine exactly which aspects of the boiler are working correctly and which are not.

For example:
If the domestic hot water works but the heating doesn't, refer to **chart No. 1.**
If heating works correctly but the hot water doesn't, refer to **chart No. 2.**

IMPORTANT: Always adopt a logical, step by step procedure starting at the beginning of the appropriate fault finding chart.

WARNING. Always isolate the boiler from the electrical supply before carrying out any electrical replacement work.
Always check for gas soundness after any service work.

NO CENTRAL HEATING

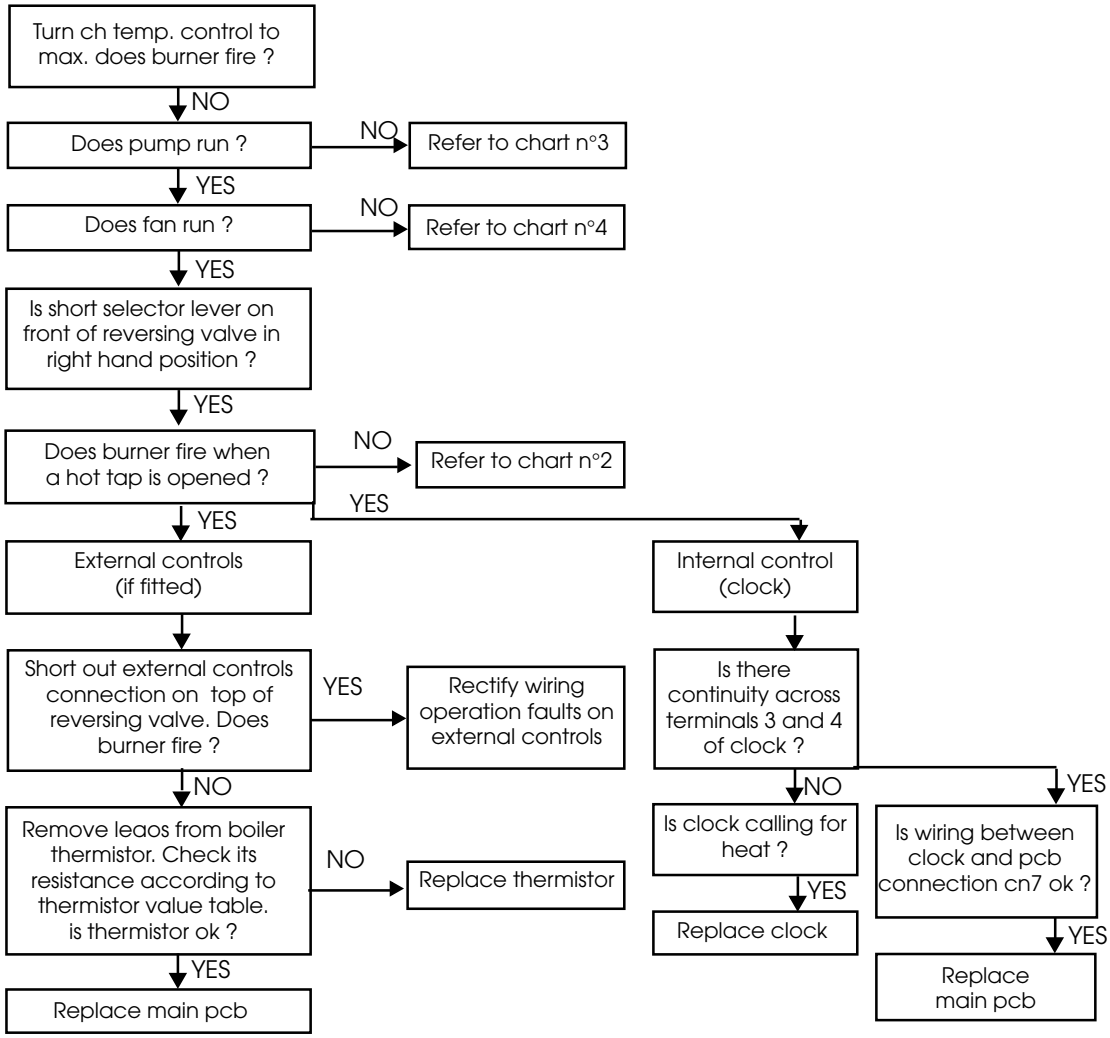

CHART 1

FAULT FINDING

NO HOT WATER
(except SB models)

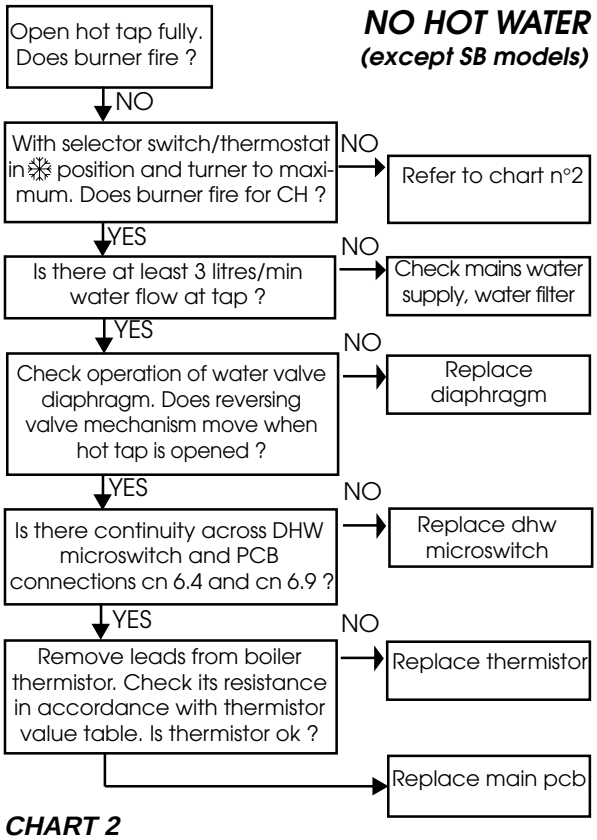

CHART 2

PUMP NOT RUNNING

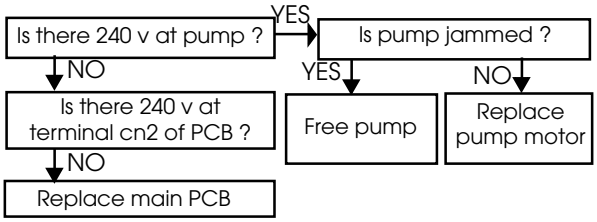

CHART 3

FAN NOT RUNNING

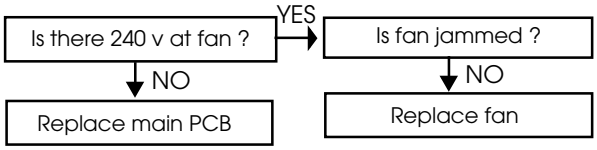

CHART 4

Termistor Values

Temperature (°C)	**0**	**5**	**10**	**15**	**20**	**25**	**30**	**35**	**40**	**45**	**50**
nominal resistance (Ω) for NTC	**32565**	**25345**	**19875**	**15700**	**12500**	**10000**	**8060**	**6535**	**5330**	**4370**	**3605**
Temperature (°C)	**55**	**60**	**65**	**70**	**75**	**80**	**85**	**90**	**95**	**100**	
nominal resistance (Ω) for NTC	**2989**	**2490**	**2085**	**1755**	**1480**	**1260**	**1070**	**920**	**785**	**680**	

SPARE PARTS

When ordering spare parts, quote the part number and description, stating the appliance model number and serial number from the data badge.

Short parts list

No.	Description	Part No.
1	Fan	57059
2	Pump	51236
3	Spark generator	51110
4	Air pressure switch	51692
5	Main PCB (SB models)	57267
6	Main PCB (THEMA F 23 E)	57265
7	Control PCB (all models)	57277
8	Water valve diaphragm kit	52519
9	Microswitch assembly (THEMA F 23 E)	51590
10	Temperature/pressure gauge	57278
11	Boiler Thermistor	57060
12	Overheat thermostat	51199

Saunier Duval

108198 B 06/98